FOREWORD

This wiring diagram manual has been prepared to provide information on the electrical system of the 2004 COROLLA.

Applicable models: ZZE130 Series

For service specifications and repair procedures of the above models other than those listed in this manual, refer to the following manuals;

Manual Name	Pub. No.
● 2004 COROLLA Repair Manual	
Volume 1	RM1037U1
Volume 2	RM1037U2
● 2004 COROLLA New Car Features Supplement	NCF249U

All information in this manual is based on the latest product information at the time of publication. However, specifications and procedures are subject to change without notice.

TOYOTA MOTOR CORPORATION

NOTICE

When handling supplemental restraint system components (removal, installation or inspection, etc.), always follow the direction given in the repair manuals listed above to prevent accidents and supplemental restraint system malfunction.

2004 COROLLA
ELECTRICAL WIRING DIAGRAM

	Section Code	Page
INTRODUCTION	A	2
HOW TO USE THIS MANUAL	B	3
TROUBLESHOOTING	C	12
ABBREVIATIONS	D	17
GLOSSARY OF TERMS AND SYMBOLS	E	18
RELAY LOCATIONS	F	20
ELECTRICAL WIRING ROUTING	G	32
SYSTEM CIRCUITS	H	47
GROUND POINT	I	194
POWER SOURCE (Current Flow Chart)	J	198
CONNECTOR LIST	K	204
PART NUMBER OF CONNECTORS	L	210
OVERALL ELECTRICAL WIRING DIAGRAM	M	214

©2003 TOYOTA MOTOR CORPORATION
All rights reserved. This book may not be reproduced or copied, in whole or in part, without the written permission of Toyota Motor Corporation.

2004 COROLLA ELECTRICAL WIRING DIAGRAM SYSTEM CIRCUITS

	Page
ABS	154
Air Conditioning	188
Automatic Glare–Resistant EC Mirror with Compass	112
Back–Up Light	96
Charging	56
Cigarette Lighter	104
Clock	106
Combination Meter	180
Cruise Control	148
Door Lock Control	118
Electronically Controlled Transmission	142
Engine Control	58
Fog Light	76
Headlight	70
Heater	192
Horn	102
Ignition	52
Illumination	86
Interior Light	90
Key Reminder Buzzer	168
Light Reminder Buzzer	168
Moon Roof	140
Power Outlet	108
Power Source	48
Power Window	114
Radiator Fan	186
Radio and Player	176
Rear Window Defogger	174
Remote Control Mirror	110
Seat Belt Warning	172
Shift Lock	166
SRS	159
Starting	52
Stop Light	94
Taillight	82
Turn Signal and Hazard Warning Light	78
TVIP System	134
Wiper and Washer	98
Wireless Door Lock Control	126

ABBREVIATIONS

The following abbreviations are used in this manual.

A/C	=	Air Conditioning
A/T	=	Automatic Transaxle
ABS	=	Anti–Lock Brake System
ECU	=	Electronic Control Unit
ESA	=	Electronic Spark Advance
EVAP	=	Evaporative Emission
IAC	=	Idle Air Control
IC	=	Integrated Circuit
J/B	=	Junction Block
LED	=	Light Emitting Diode
LH	=	Left–Hand
M/T	=	Manual Transaxle
O/D	=	Overdrive
R/B	=	Relay Block
RH	=	Right–Hand
SFI	=	Sequential Multiport Fuel Injection
SRS	=	Supplemental Restraint System
SW	=	Switch
TEMP.	=	Temperature
TVIP	=	TOYOTA Vehicle Intrusion Protection
VSV	=	Vacuum Switching Valve
VVT	=	Variable Valve Timing
w/	=	With
w/o	=	Without

* The titles given inside the components are the names of the terminals (terminal codes) and are not treated as being abbreviations.

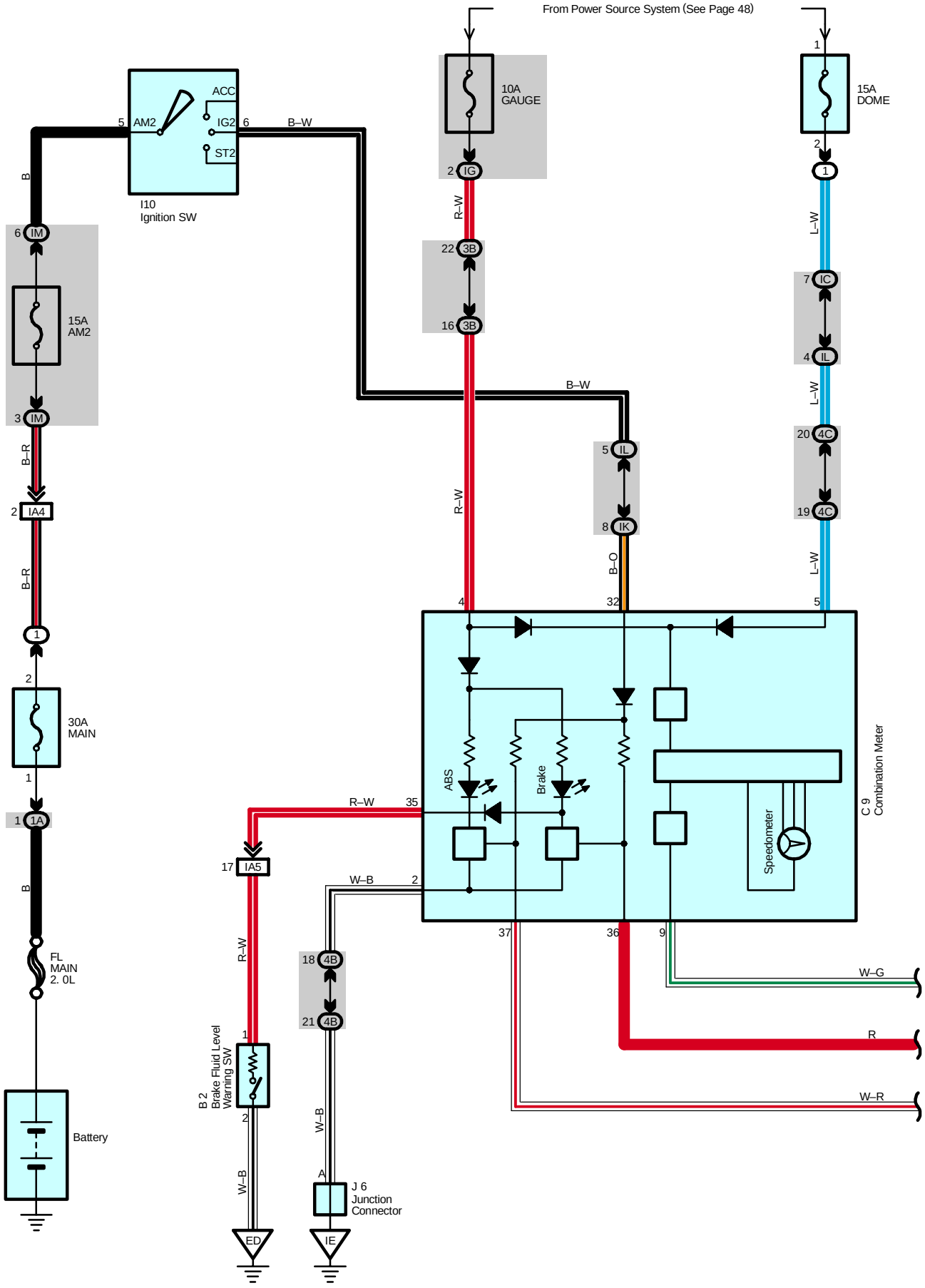
From Power Source System (See Page 48)
10A GAUGE
15A DOME
15A AM2
30A MAIN
FL MAIN 2. 0L
Battery
I10 Ignition SW
ACC
AM2
IG2
ST2
B–W
R–W
B–R
B–O
L–W
B
IM
IA4
IA5
1A
IG
3B
IL
IK
IC
4C
ABS
Brake
Speedometer
C 9 Combination Meter
B 2 Brake Fluid Level Warning SW
J 6 Junction Connector
W–B
W–G
R
W–R
ED
IE

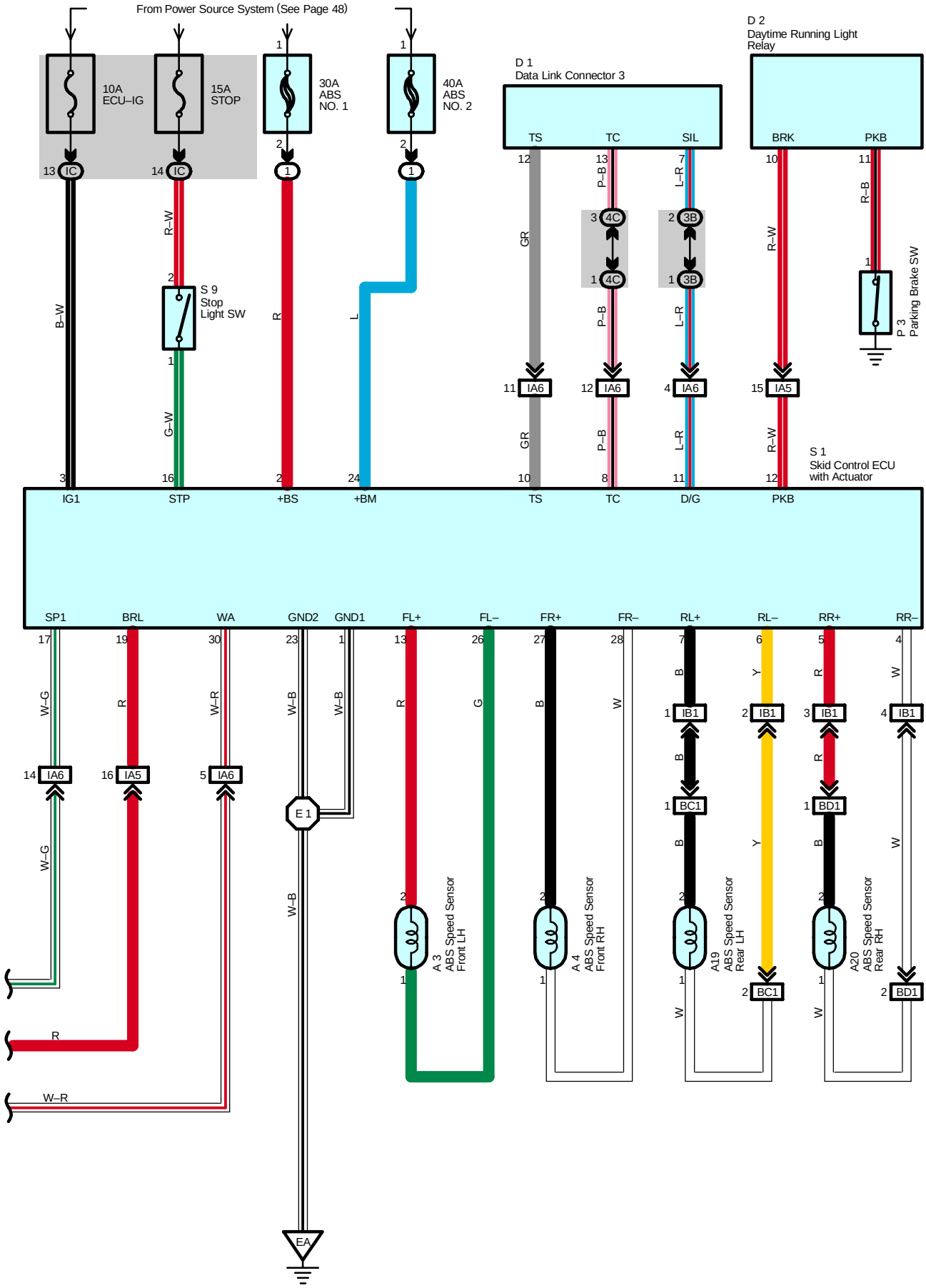
From Power Source System (See Page 48)
10A
ECU–IG
15A
STOP
30A
ABS
NO. 1
40A
ABS
NO. 2
D 1
Data Link Connector 3
TS
TC
SIL
D 2
Daytime Running Light
Relay
BRK
PKB
S 9
Stop
Light SW
P 3
Parking Brake SW
S 1
Skid Control ECU
with Actuator
IG1
STP
+BS
+BM
TS
TC
D/G
PKB
SP1
BRL
WA
GND2
GND1
FL+
FL–
FR+
FR–
RL+
RL–
RR+
RR–
E 1
EA
A 3
ABS Speed Sensor
Front LH
A 4
ABS Speed Sensor
Front RH
A19
ABS Speed Sensor
Rear LH
A20
ABS Speed Sensor
Rear RH

System Outline

ABS is a brake system designed to improve the operating ability and securing the stability of the vehicle by preventing the lock–up of the vehicle by controlling the wheel cylinder pressure of all the four wheels at the time of sudden braking.

1. Input Signals

(1) Speed sensor signal

The speed of the wheels is detected and input to TERMINALS FL+, FR+, RL+, and RR+ of the skid control ECU and actuator.

(2) Stop light SW signal

A signal is input to TERMINAL STP of the skid control ECU with actuator when brake pedal is depressed.

2. System Operation

When the wheels are locked–up, the solenoid inside the actuator is controlled by the signal from the skid control ECU with actuator, and the brake fluid in the wheel cylinder will flow through the reservoir and reduce the hydraulic pressure.

While the ABS is in operation, as the skid control ECU with actuator always outputs the operation signal to the pump inside the actuator, and the brake fluid stored inside the reservoir will be sucked up by the pump inside the actuator and returned to the master cylinder.

When the hydraulic pressure of the wheel cylinder is decompressed or increased until the necessary hydraulic pressure, the solenoid inside the actuator is controlled by the control signal from the skid control ECU with actuator and as a result, hydraulic pressure of the wheel cylinder will be closed at both the master cylinder and reservoir sides routes, and the hydraulic pressure of the wheel cylinder will be in the hold condition.

If increase of the hydraulic pressure volume of the wheel cylinder becomes necessary, the control signals from the skid control ECU with actuator control the solenoid inside the actuator, to resume to the normal condition. Thus the brake fluid of the master cylinder will be sent to the wheel cylinder and will increase the hydraulic pressure of the wheel cylinder. At this time, in the case that the brake fluid is left in the reservoir, it will be sucked up by the pump inside the actuator and will be sent to the wheel cylinder.

Service Hints

A3, A4 ABS Speed Sensor Front LH, RH

2–1 : 0.92 –1.22 kΩ (25˚C, 77˚F)

A19, A20 ABS Speed Sensor Rear LH, RH

1–2 : 1.0 –1.4 kΩ (25˚C, 77˚F)

S1 Skid Control ECU with Actuator

23, 1–Ground : Always continuity
3–Ground : Approx. 12 volts with the ignition SW at ON position
16–Ground : Approx. 12 volts with the brake pedal depressed
2, 24–Ground : Always approx. 12 volts

○ : Parts Location

Code	See Page	Code	See Page	Code	See Page
A3	32	C9	34	P3	35
A4	32	D1	34	S1	33
A19	36	D2	34	S9	35
A20	36	I10	35		
B2	32	J6	35		

▭ : Relay Blocks

Code	See Page	Relay Blocks (Relay Block Location)
1	22	Engine Room R/B (Engine Compartment Left)

: Junction Block and Wire Harness Connector

Code	See Page	Junction Block and Wire Harness (Connector Location)
IC	25	Engine Room Main Wire and Instrument Panel J/B (Lower Finish Panel)
IG	25	Instrument Panel Wire and Instrument Panel J/B (Lower Finish Panel)
IK	24	
IL		
IM		
1A	22	Engine Wire and Engine Room J/B (Engine Compartment Left)
3B	28	Instrument Panel Wire and RH J/B (Right Side of the Instrument Panel Reinforcement)
4B	30	Instrument Panel Wire and Center J/B (Behind the Combination Meter)
4C		

: Connector Joining Wire Harness and Wire Harness

Code	See Page	Joining Wire Harness and Wire Harness (Connector Location)
IA4	40	Engine Room Main Wire and Instrument Panel Wire (Left Side of the Instrument Panel Reinforcement)
IA5		
IA6		
IB1	40	Engine Room Main Wire and Floor Wire (Cowl Side Panel LH)
BC1	44	Skid Control Sensor Wire LH and Floor Wire (Quarter Wheel House LH)
BD1	44	Skid Control Sensor Wire RH and Floor Wire (Quarter Wheel House RH)

: Ground Points

Code	See Page	Ground Points Location
EA	38	Front Right Fender
ED	38	Front Left Suspension Tower
IE	40	Behind the Combination Meter

: Splice Points

Code	See Page	Wire Harness with Splice Points	Code	See Page	Wire Harness with Splice Points
E1	38	Engine Room Main Wire			

Memo

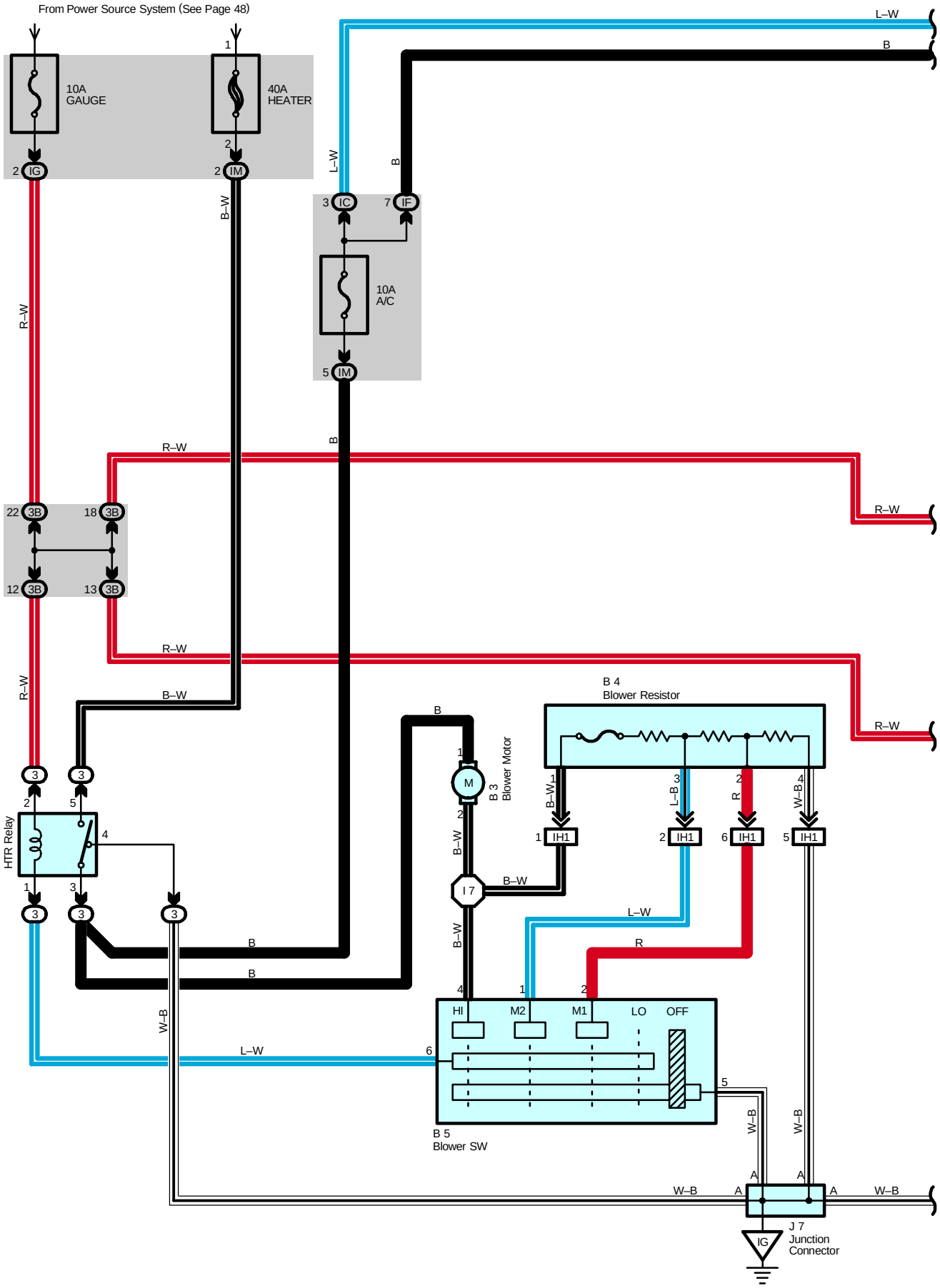
From Power Source System (See Page 48)
10A GAUGE
40A HEATER
10A A/C
L–W
B
R–W
B–W
W–B
HTR Relay
B 3 Blower Motor
B 4 Blower Resistor
B 5 Blower SW
HI
M2
M1
LO
OFF
J 7 Junction Connector
IG

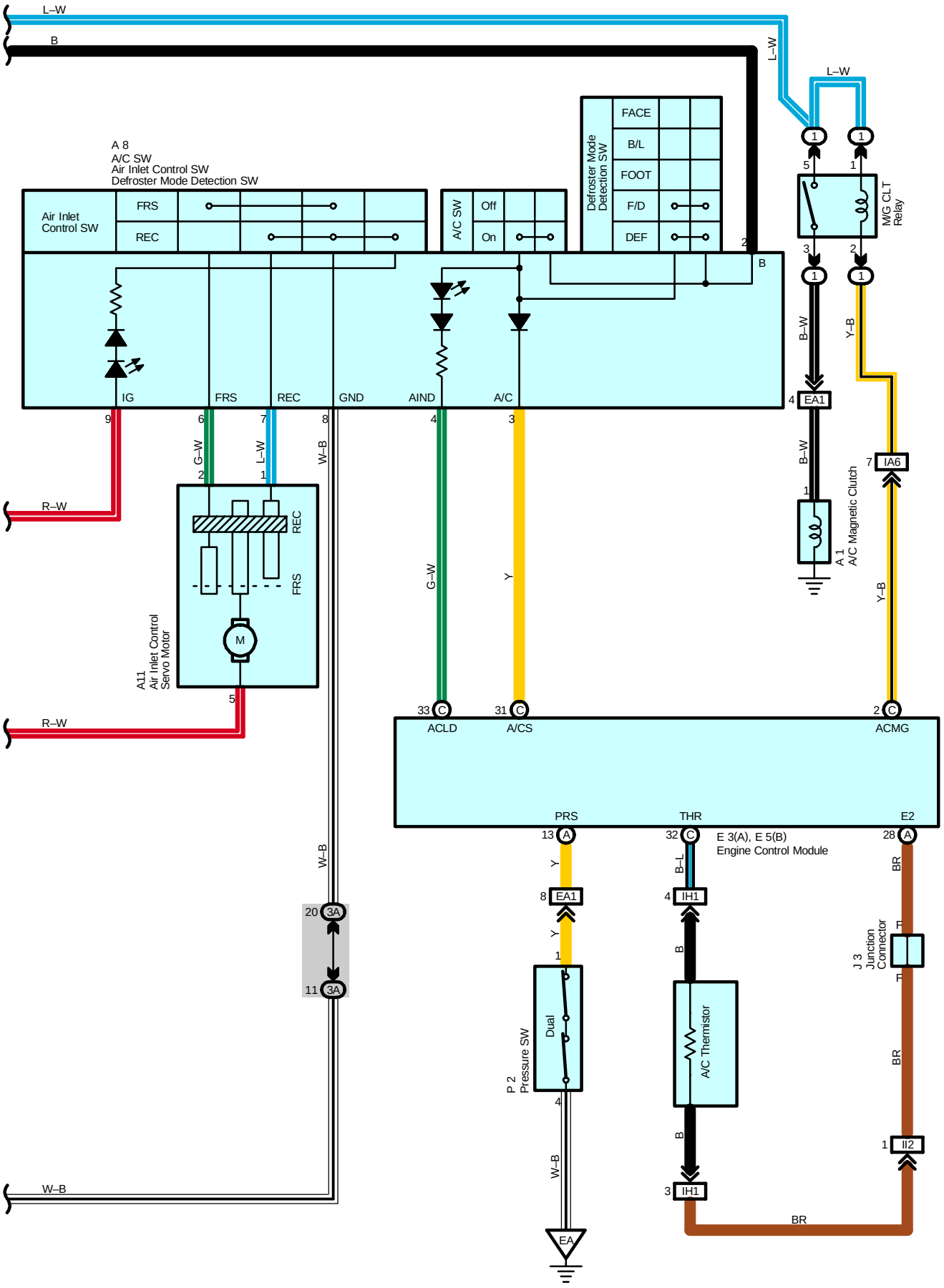
L–W
B
A 8
A/C SW
Air Inlet Control SW
Defroster Mode Detection SW
Air Inlet Control SW
FRS
REC
A/C SW
Off
On
Defroster Mode Detection SW
FACE
B/L
FOOT
F/D
DEF
MG CLT Relay
IG
FRS
REC
GND
AIND
A/C
R–W
G–W
L–W
W–B
B–W
Y–B
EA1
IA6
A 1
A/C Magnetic Clutch
A11
Air Inlet Control Servo Motor
M
ACLD
A/CS
ACMG
PRS
THR
E2
E 3(A), E 5(B)
Engine Control Module
P 2
Pressure SW
Dual
A/C Thermistor
J 3
Junction Connector
3A
IH1
II2
EA
BR

System Outline

Current is applied at all times through the HEATER fuse to TERMINAL 5 of the HTR relay.
When the ignition SW is turned on, the current flows through the GAUGE fuse to TERMINAL 2 of the HTR relay to TERMINAL 1 to TERMINAL 6 of the blower SW.

1. Heater Blower Motor Operation

* Low speed operation
  When the blower SW is moved to LO position, the current flows to TERMINAL 6 of the blower SW to TERMINAL 5 to GROUND, causing the HTR relay to turn on. This causes the current flows from the HEATER fuse to TERMINAL 5 of the HTR relay to TERMINAL 3 to the blower motor to the blower resistor to GROUND, rotating the blower motor at low speed.

* Medium speed operation (Operation at M1, M2)
  When the blower SW is moved to M1 position, the current flows to TERMINAL 6 of the blower SW to TERMINAL 5 to GROUND, causing the HTR relay to turn on. This causes the current flows from the HEATER fuse to TERMINAL 5 of the HTR relay to TERMINAL 3 to the blower motor to the blower resistor to TERMINAL 2 of the blower SW to TERMINAL 5 to GROUND. At this time, the blower resistance of the blower resistor is smaller than at low speed, so the blower motor rotates at medium low speed.
  When the blower SW is moved to M2 position, the current flows through the HTR relay to the blower motor to the blower resistor to TERMINAL 1 of the blower SW to TERMINAL 5 to GROUND. At this time, resistance of the blower resistor is smaller than at M1 position, so the blower motor rotates at medium high speed.

* High speed operation
  When the blower SW is moved to HI position, the current flows to TERMINAL 6 of the blower SW to TERMINAL 5 to GROUND, causing the HTR relay to turn on.
  This causes the current flows from the HEATER fuse to TERMINAL 5 of the HTR relay to TERMINAL 3 to the blower motor to TERMINAL 4 of the blower SW to TERMINAL 5 to GROUND, rotating the blower motor at high speed.

2. Air Conditioning Operation

When the blower SW is set on, the current flows from the HTR fuse to the HTR relay (Point side) to the A/C fuse to the TERMINAL 2 of the A/C SW. If the A/C SW is turned on, at this time a signal is input into the engine control module. This activates the engine control module and M/G CLT relay. So that current flows from the A/C fuse to M/G CLT relay (Point side) to A/C magnetic clutch. Causing the compressor to operate.

Service Hints

HTR Relay

5–3 : Closed with the ignition SW at ON position and the blower SW on

P2 Pressure SW

1–4 : Open with the refrigerant pressure at less than approx. 2.0 kgf/cm^2 (28.4 psi, 196.1 kpa) or more than approx. 32.0 kgf/cm^2 (455 psi, 3138.1 kpa)

○ : Parts Location

Code	See Page	Code	See Page	Code	See Page
A1	32	B3	34	E5 B	34
A8	34	B4	34	J3	35
A9	34	B5	34	J7	35
A11	34	E3 A	34	P2	33

▭ : Relay Blocks

Code	See Page	Relay Blocks (Relay Block Location)
1	22	Engine Room R/B (Engine Compartment Left)
3	28	RH R/B (Right Side of the Instrument Panel Reinforcement)

: Junction Block and Wire Harness Connector

Code	See Page	Junction Block and Wire Harness (Connector Location)
IC	25	Engine Room Main Wire and Instrument Panel J/B (Lower Finish Panel)
IF	25	Instrument Panel Wire and Instrument Panel J/B (Lower Finish Panel)
IG		
IM	24	
3A	28	Instrument Panel Wire and RH J/B (Right Side of the Instrument Panel Reinforcement)
3B		

: Connector Joining Wire Harness and Wire Harness

Code	See Page	Joining Wire Harness and Wire Harness (Connector Location)
EA1	38	Engine Wire and Engine Room Main Wire (Inside of the Engine Room R/B)
IA6	40	Engine Room Main Wire and Instrument Panel Wire (Left Side of the Instrument Panel Reinforcement)
IH1	42	Instrument Panel Wire and A/C Sub Wire (Left Upper Side of the Blower Unit)
II2	42	Engine Wire and Instrument Panel Wire (Blower Unit RH)

: Ground Points

Code	See Page	Ground Points Location
EA	38	Front Right Fender
IG	40	Right Kick Panel

: Splice Points

Code	See Page	Wire Harness with Splice Points	Code	See Page	Wire Harness with Splice Points
I7	42	Instrument Panel Wire			

Back–Up Light

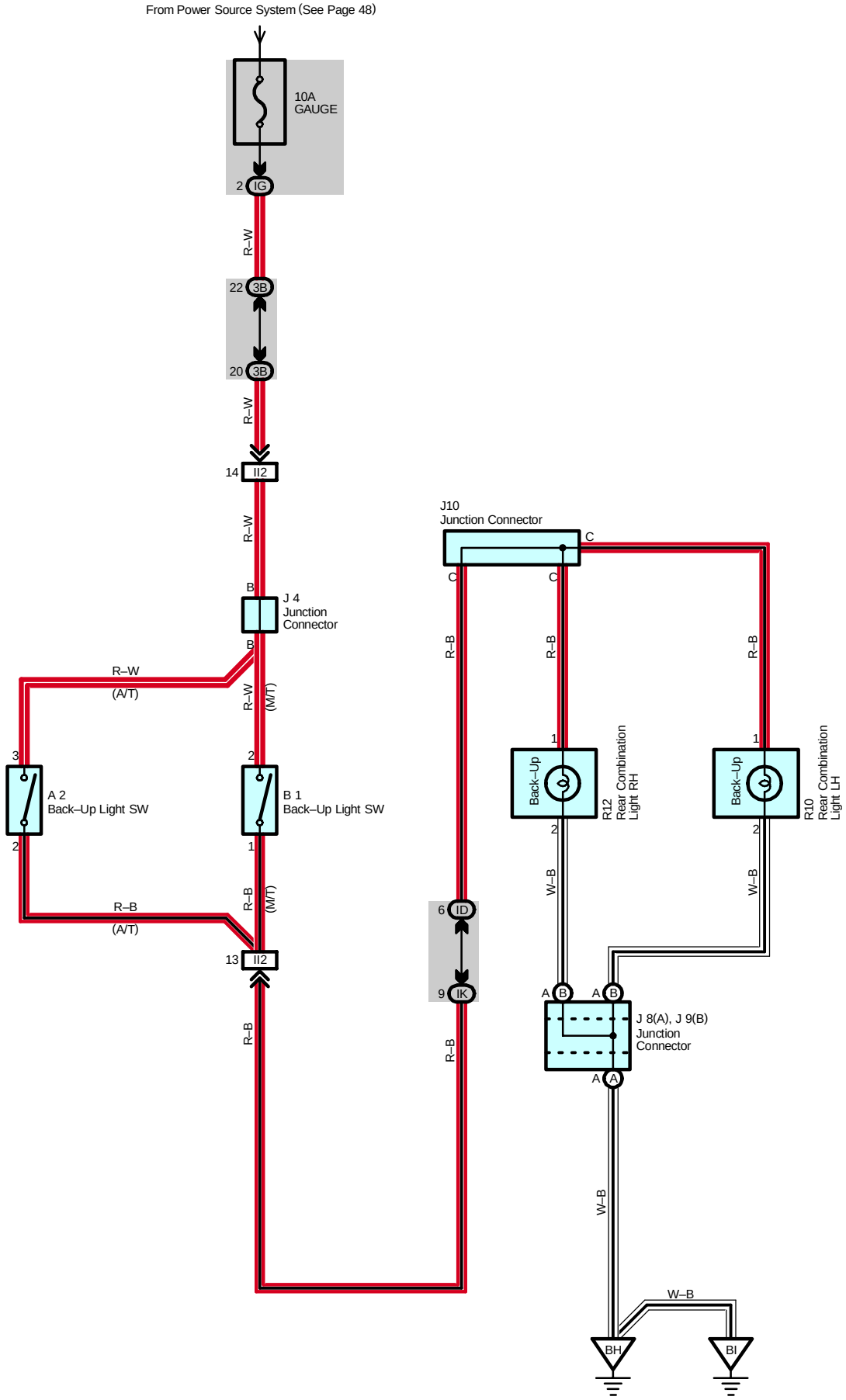

Service Hints

A2 Back–Up Light SW (A/T)

2–3 : Closed with the shift lever at R position

B1 Back–Up Light SW (M/T)

2–1 : Closed with the shift lever at R position

○ : Parts Location

Code	See Page	Code		See Page	Code	See Page
A2	32	J8	A	36	R10	37
B1	32	J9	B	36	R12	37
J4	35	J10		36		



: Junction Block and Wire Harness Connector

Code	See Page	Junction Block and Wire Harness (Connector Location)
ID	25	Floor Wire and Instrument Panel J/B (Lower Finish Panel)
IG	25	Instrument Panel Wire and Instrument Panel J/B (Lower Finish Panel)
IK	24	
3A	28	Instrument Panel Wire and RH J/B (Right Side of the Instrument Panel Reinforcement)
3B		



: Connector Joining Wire Harness and Wire Harness

Code	See Page	Joining Wire Harness and Wire Harness (Connector Location)
II2	42	Engine Wire and Instrument Panel Wire (Blower Unit RH)



: Ground Points

Code	See Page	Ground Points Location
BH	44	Under the Left Quarter Pillar
BI	44	Lower Back Panel

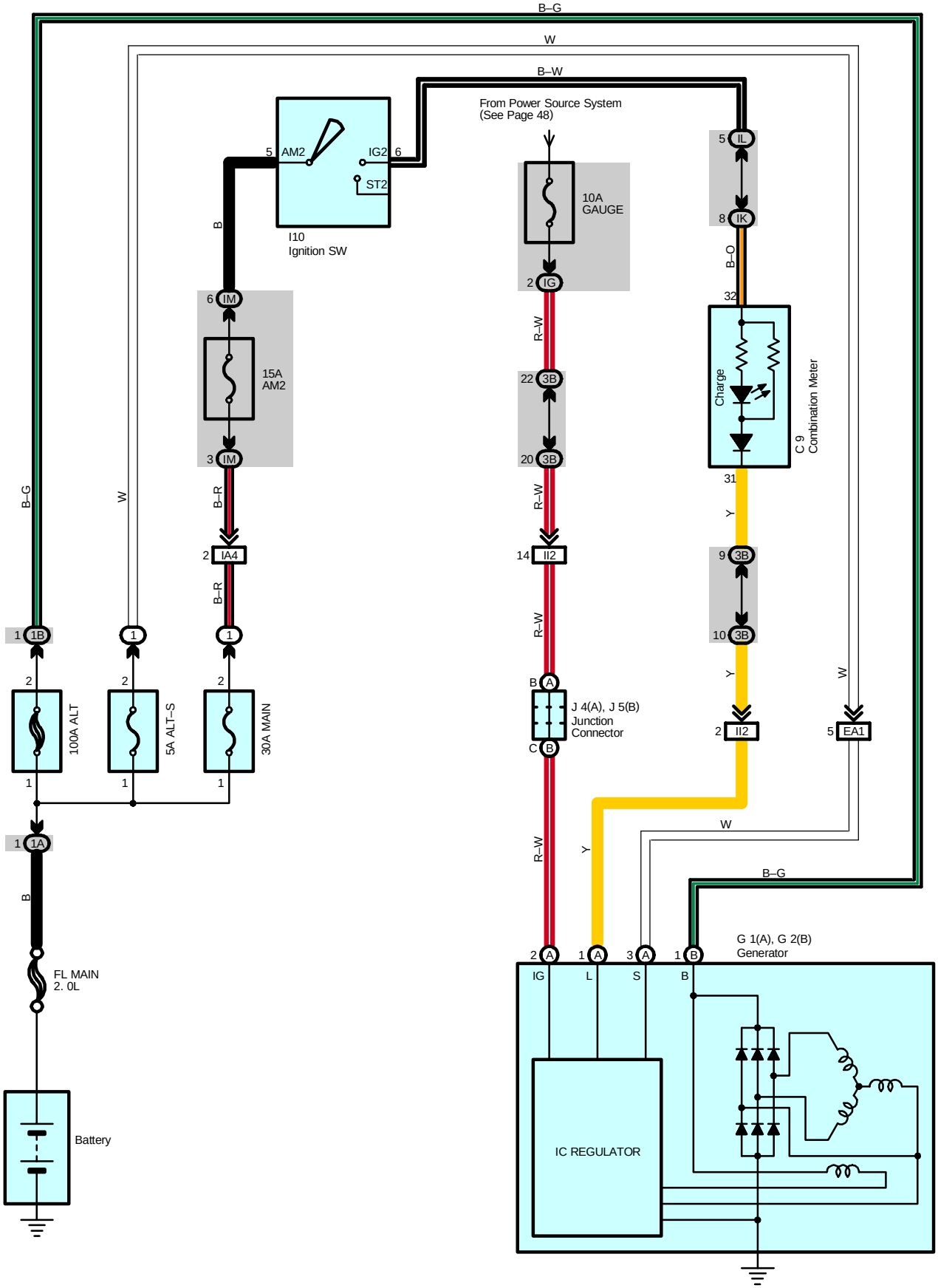
B–G
W
B–W
From Power Source System
(See Page 48)
5 AM2
IG2 6
ST2
I10
Ignition SW
B
6 IM
15A
AM2
3 IM
B–R
2 IA4
B–R
1 1B
2
100A ALT
1
1 1A
B
FL MAIN
2. 0L
Battery
W
1
2
5A ALT–S
1
B–G
1
2
30A MAIN
1
10A
GAUGE
2 IG
R–W
22 3B
20 3B
R–W
14 II2
R–W
B A
C B
J 4(A), J 5(B)
Junction
Connector
R–W
Y
2 IG
1 L
3 S
1 B
G 1(A), G 2(B)
Generator
IC REGULATOR
5 IL
8 IK
B–O
32
Charge
C 9
Combination Meter
31
Y
9 3B
10 3B
Y
2 II2
W
5 EA1
W
B–G

Service Hints

G1 (A) Generator

(A) 3–Ground : 13.2–14.0 volts with the engine running at 5000 rpm and 115˚C (239˚F)

(A) 1–Ground : 0–4 volts with the ignition SW at ON position and the engine not running

: Parts Location

Code		See Page	Code		See Page	Code		See Page
C9		34	G2	B	32	J4	A	35
G1	A	32	I10		35	J5	B	35

: Relay Blocks

Code	See Page	Relay Blocks (Relay Block Location)
1	22	Engine Room R/B (Engine Compartment Left)

: Junction Block and Wire Harness Connector

Code	See Page	Junction Block and Wire Harness (Connector Location)
IG	25	Instrument Panel Wire and Instrument Panel J/B (Lower Finish Panel)
IK	24	
IL		
IM		
1A	22	Engine Wire and Engine Room J/B (Engine Compartment Left)
1B		
3B	28	Instrument Panel Wire and RH J/B (Right Side of the Instrument Panel Reinforcement)

: Connector Joining Wire Harness and Wire Harness

Code	See Page	Joining Wire Harness and Wire Harness (Connector Location)
EA1	38	Engine Wire and Engine Room Main Wire (Inside of the Engine Room R/B)
IA4	40	Engine Room Main Wire and Instrument Panel Wire (Left Side of the Instrument Panel Reinforcement)
II2	42	Engine Wire and Instrument Panel Wire (Blower Unit RH)

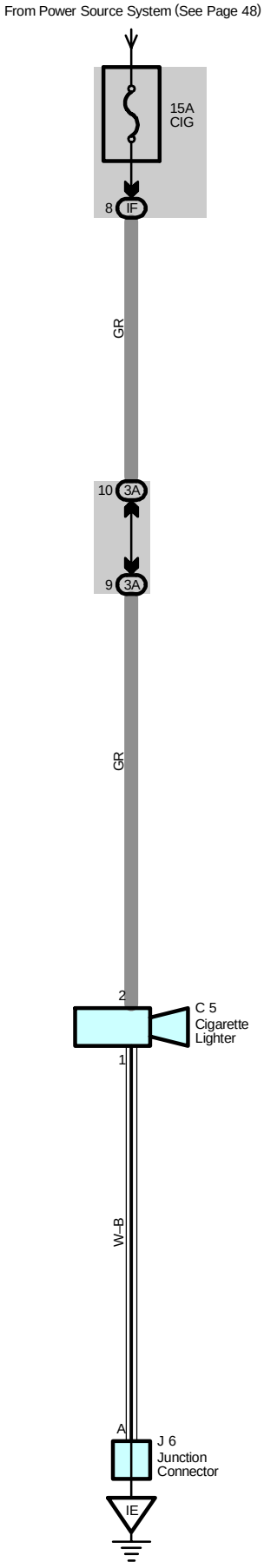
From Power Source System (See Page 48)
15A
CIG
8
IF
GR
10
3A
9
3A
GR
2
C 5
Cigarette
Lighter
1
W-B
A
J 6
Junction
Connector
IE

Service Hints

C5 Cigarette Lighter

2–Ground : Approx. 12 volts with the ignition SW at ACC or ON position

1–Ground : Always continuity

: Parts Location

Code	See Page	Code	See Page	Code	See Page
C5	34	J6	35		

: Junction Block and Wire Harness Connector

Code	See Page	Junction Block and Wire Harness (Connector Location)
IF	25	Instrument Panel Wire and Instrument Panel J/B (Lower Finish Panel)
3A	28	Instrument Panel Wire and RH J/B (Right Side of the Instrument Panel Reinforcement)

: Ground Points

Code	See Page	Ground Points Location
IE	40	Behind the Combination Meter

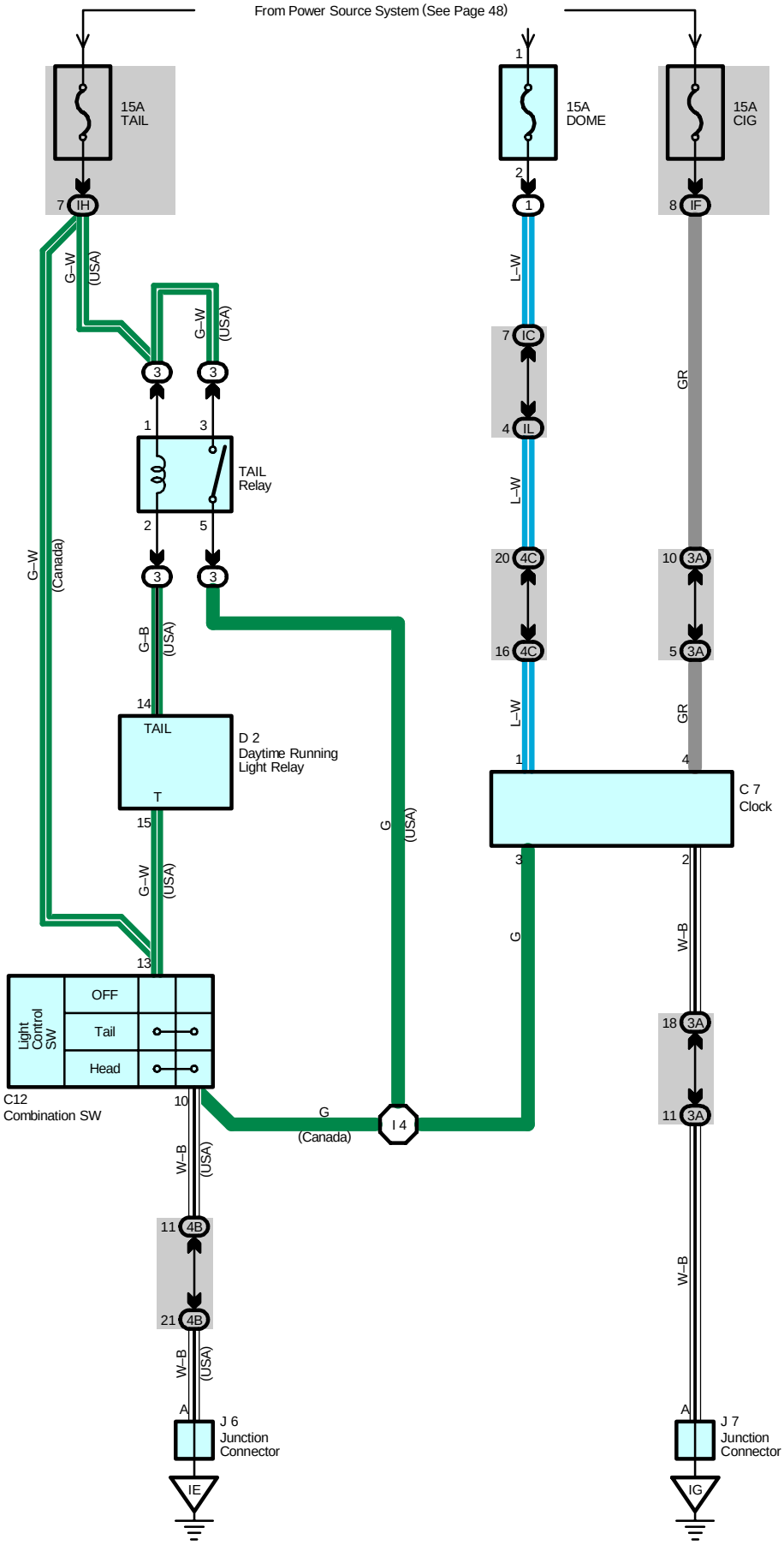
From Power Source System (See Page 48)
15A
TAIL
15A
DOME
15A
CIG
7 IH
1
2
1
8 IF
G–W
(USA)
G–W
(USA)
L–W
7 IC
GR
3
3
1
3
4 IL
TAIL
Relay
L–W
2
5
G–W
(Canada)
20 4C
10 3A
3
3
16 4C
5 3A
G–B
(USA)
L–W
GR
14
1
4
TAIL
D 2
Daytime Running
Light Relay
T
C 7
Clock
15
G
(USA)
3
2
G–W
(USA)
G
W–B
13
18 3A
OFF
Light
Control
SW
Tail
Head
11 3A
C12
Combination SW
10
G
(Canada)
I 4
W–B
(USA)
11 4B
W–B
21 4B
W–B
(USA)
A
A
J 6
Junction
Connector
J 7
Junction
Connector
IE
IG

Service Hints

C7 Clock

4–Ground : Approx. 12 volts with the ignition SW at ACC or ON position
1–Ground : Always approx. 12 volts
3–Ground : Approx. 12 volts with the light control SW at Tail or Head position
2–Ground : Always continuity

: Parts Location

Code	See Page	Code	See Page	Code	See Page
C7	34	D2	34	J7	35
C12	34	J6	35		

: Relay Blocks

Code	See Page	Relay Blocks (Relay Block Location)
1	22	Engine Room R/B (Engine Compartment Left)
3	28	RH R/B (Right Side of the Instrument Panel Reinforcement)

: Junction Block and Wire Harness Connector

Code	See Page	Junction Block and Wire Harness (Connector Location)
IC	25	Engine Room Main Wire and Instrument Panel J/B (Lower Finish Panel)
IF	25	Instrument Panel Wire and Instrument Panel J/B (Lower Finish Panel)
IH		
IL	24	
3A	28	Instrument Panel Wire and RH J/B (Right Side of the Instrument Panel Reinforcement)
4B	30	Instrument Panel Wire and Center J/B (Behind the Combination Meter)
4C		

: Ground Points

Code	See Page	Ground Points Location
IE	40	Behind the Combination Meter
IG	40	Right Kick Panel

: Splice Points

Code	See Page	Wire Harness with Splice Points	Code	See Page	Wire Harness with Splice Points
I4	42	Instrument Panel Wire			

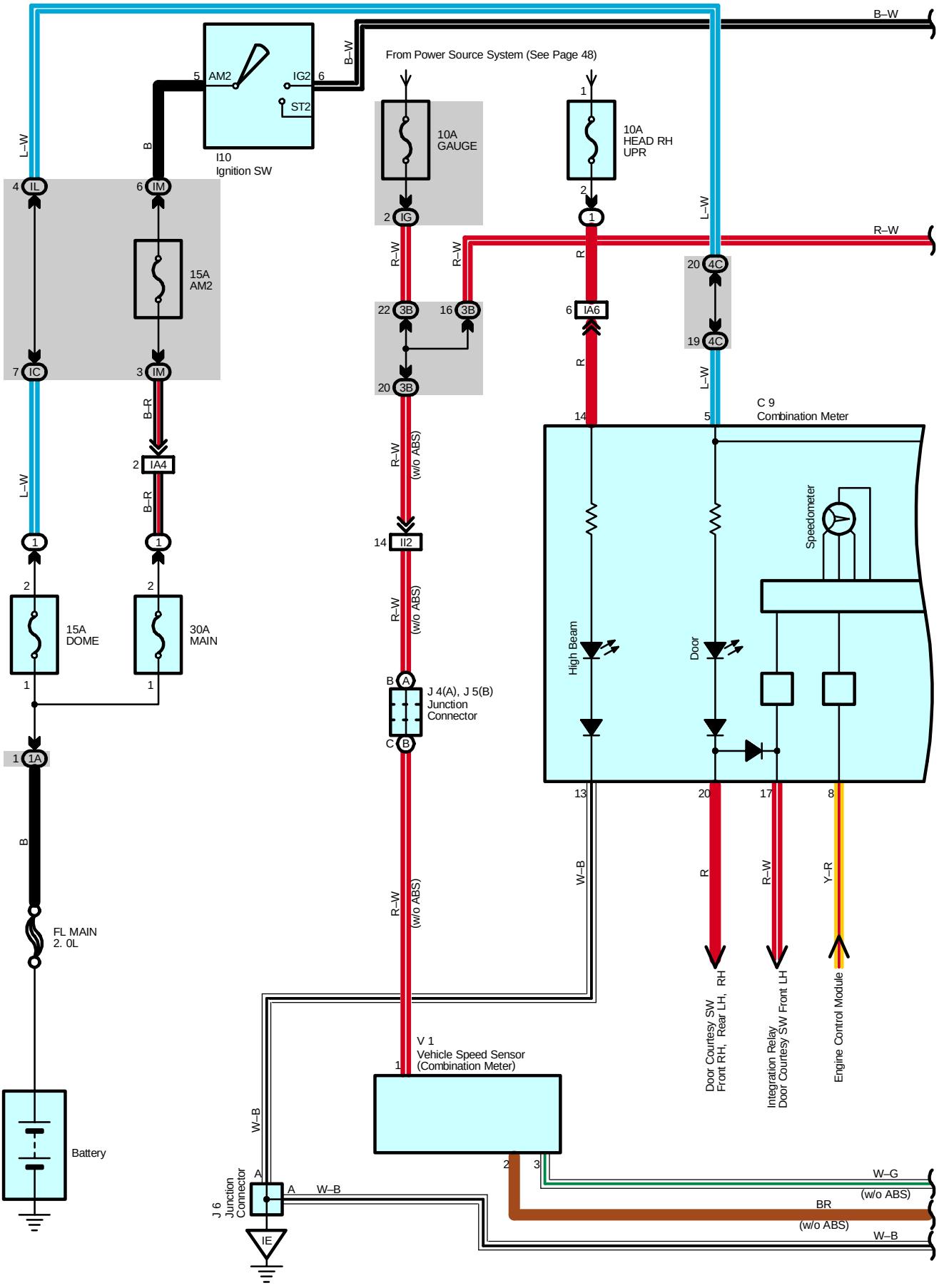
From Power Source System (See Page 48)
I10
Ignition SW
AM2
IG2
ST2
10A
GAUGE
10A
HEAD RH
UPR
15A
AM2
15A
DOME
30A
MAIN
J 4(A), J 5(B)
Junction
Connector
C 9
Combination Meter
Speedometer
High Beam
Door
FL MAIN
2. 0L
Battery
V 1
Vehicle Speed Sensor
(Combination Meter)
J 6
Junction
Connector
Door Courtesy SW
Front RH, Rear LH, RH
Integration Relay
Door Courtesy SW Front LH
Engine Control Module
(w/o ABS)
B–W
R–W
L–W
B–R
W–B
R
Y–R
W–G
BR

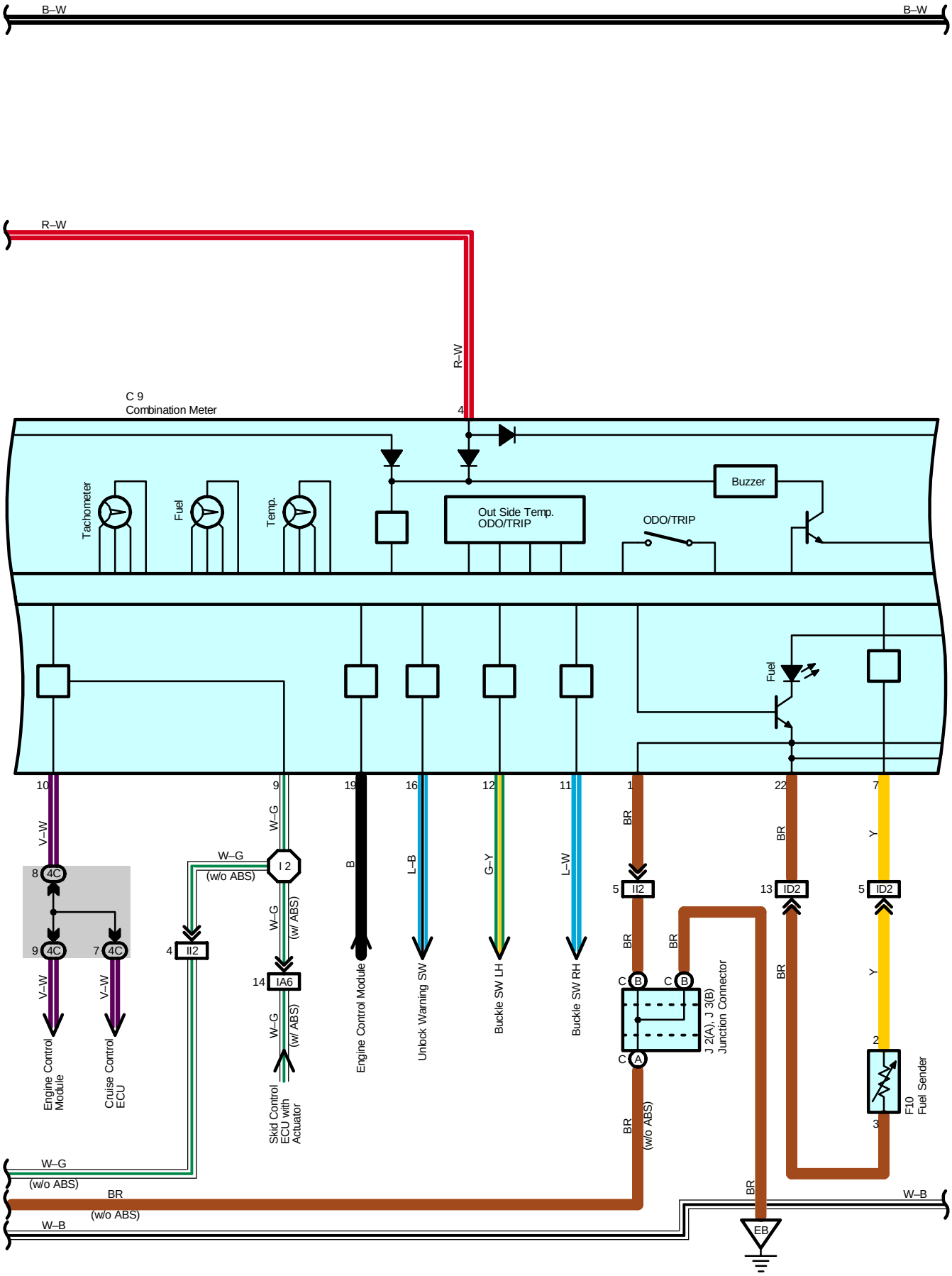
B–W
B–W
R–W
R–W
C 9
Combination Meter
4
Tachometer
Fuel
Temp.
Out Side Temp.
ODO/TRIP
Buzzer
ODO/TRIP
Fuel
10
9
19
16
12
11
1
22
7
V–W
W–G
B
L–B
G–Y
L–W
BR
BR
Y
8 4C
9 4C
7 4C
W–G
(w/o ABS)
4 I2
W–G
(w/ ABS)
14 IA6
W–G
(w/ ABS)
5 I2
BR
BR
C B
C B
C A
BR
(w/o ABS)
13 ID2
BR
5 ID2
Y
Y
2
3
F10
Fuel Sender
J 2(A), J 3(B)
Junction Connector
Engine Control Module
Cruise Control ECU
Skid Control ECU with Actuator
Engine Control Module
Unlock Warning SW
Buckle SW LH
Buckle SW RH
W–G
(w/o ABS)
BR
(w/o ABS)
W–B
BR
W–B
EB

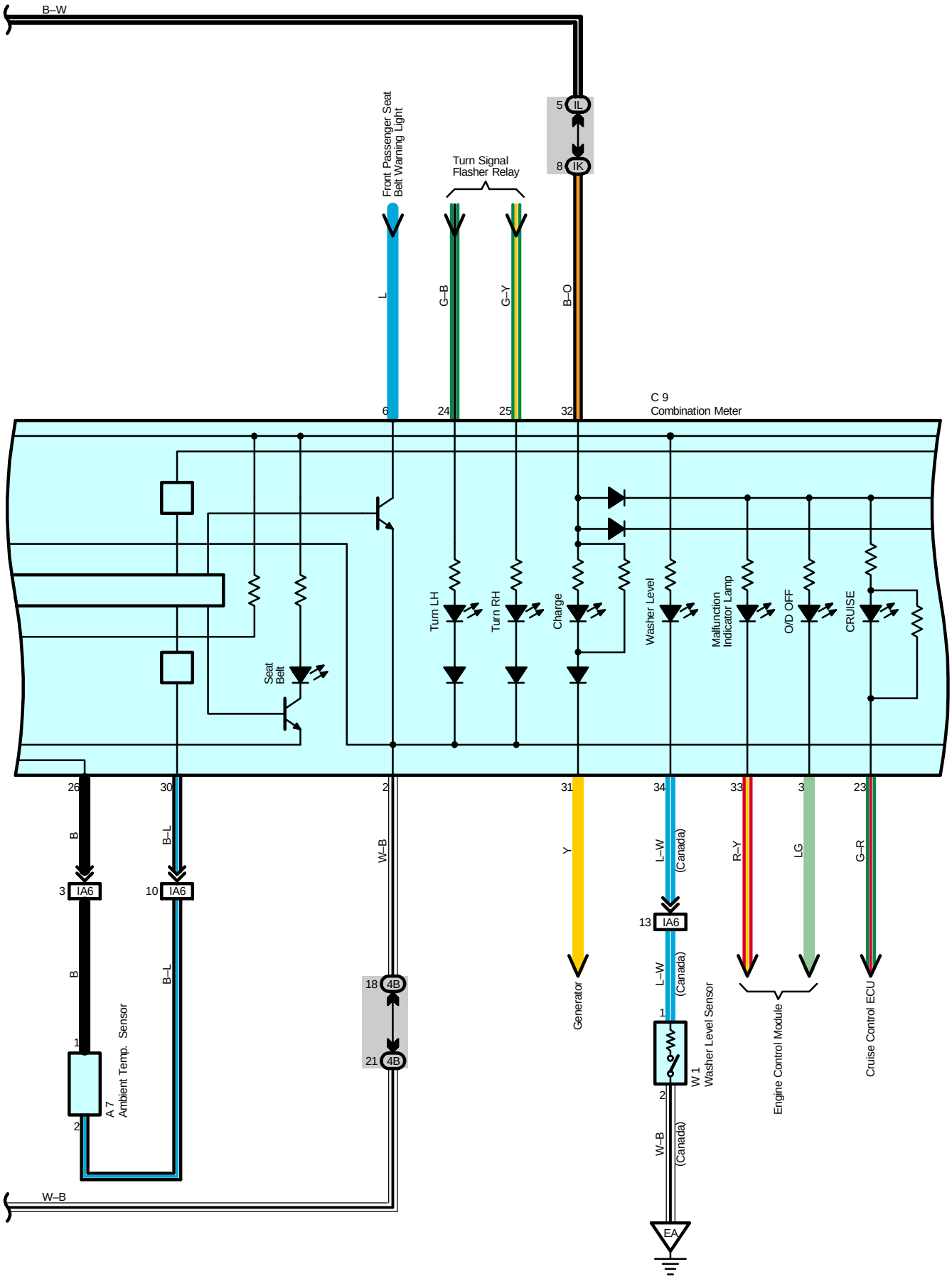
B–W
Front Passenger Seat Belt Warning Light
Turn Signal Flasher Relay
5 IL
8 IK
L
G–B
G–Y
B–O
6
24
25
32
C 9
Combination Meter
Seat Belt
Turn LH
Turn RH
Charge
Washer Level
Malfunction Indicator Lamp
O/D OFF
CRUISE
26
30
2
31
34
33
3
23
B
B–L
W–B
Y
L–W (Canada)
R–Y
LG
G–R
3 IA6
10 IA6
13 IA6
18 4B
21 4B
1
2
A 7
Ambient Temp. Sensor
Generator
W 1
Washer Level Sensor
Engine Control Module
Cruise Control ECU
W–B
EA

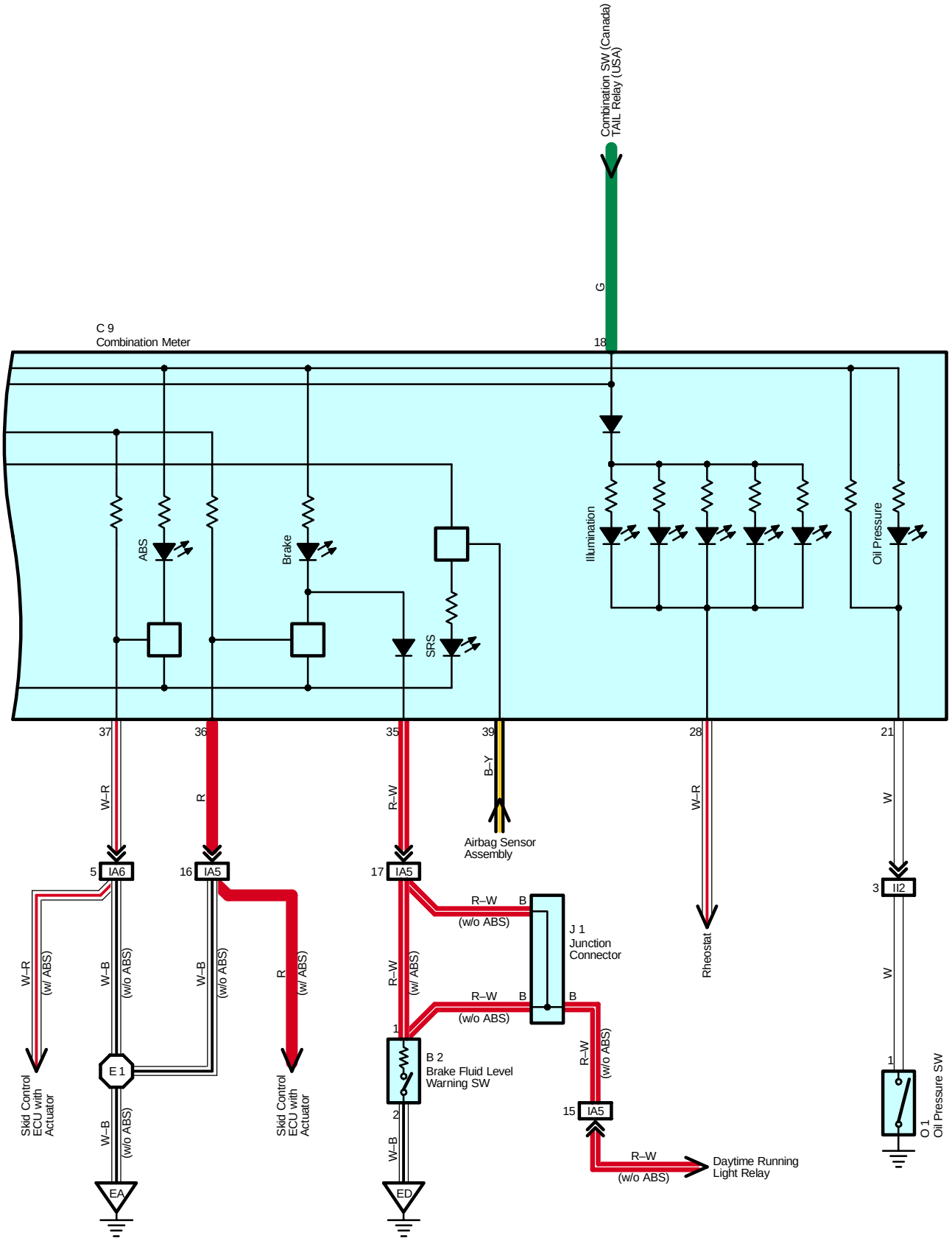
Combination SW (Canada)
TAIL Relay (USA)
G
18
C 9
Combination Meter
ABS
Brake
SRS
Illumination
Oil Pressure
37
36
35
39
28
21
W–R
R
R–W
B–Y
W–R
W
Airbag Sensor
Assembly
5
IA6
16
IA5
17
IA5
3
II2
R–W
B
(w/o ABS)
J 1
Junction
Connector
Rheostat
W–R
(w/ ABS)
W–B
(w/o ABS)
W–B
(w/o ABS)
R
(w/ ABS)
R–W
(w/ ABS)
R–W
B
B
(w/o ABS)
1
B 2
Brake Fluid Level
Warning SW
R–W
(w/o ABS)
15
IA5
R–W
(w/o ABS)
Daytime Running
Light Relay
1
O 1
Oil Pressure SW
Skid Control
ECU with
Actuator
E 1
W–B
(w/o ABS)
EA
2
W–B
ED
Skid Control
ECU with
Actuator

Combination Meter

Service Hints

B2 Brake Fluid Level Warning SW

1–2 : Closed with the float down

C9 Combination Meter

4, 32–Ground : Approx. 12 volts with the ignition SW at ON position

1, 13, 36, 37–Ground : Always continuity

5–Ground : Always approx. 12 volts

F10 Fuel Sender

2–3 : Approx. 4 Ω at fuel full

Approx. 107 Ω at fuel empty

O1 Oil Pressure SW

1–Ground : Opened with the oil pressure above approx. 19.61 kpa (2.84 psi, 0.2 kgf/cm^2)

: Parts Location

Code	See Page	Code		See Page	Code	See Page
A7	32	J1		33	J6	35
B2	32	J2	A	35	O1	33
C9	34	J3	B	35	V1	33
F10	36	J4	A	35	W1	33
I10	35	J5	B	35		

: Relay Blocks

Code	See Page	Relay Blocks (Relay Block Location)
1	22	Engine Room R/B (Engine Compartment Left)

: Junction Block and Wire Harness Connector

Code	See Page	Junction Block and Wire Harness (Connector Location)
IC	25	Engine Room Main Wire and Instrument Panel J/B (Lower Finish Panel)
IG	25	Instrument Panel Wire and Instrument Panel J/B (Lower Finish Panel)
IK	24	
IL		
IM		
1A	22	Engine Wire and Engine Room J/B (Engine Compartment Left)
3B	28	Instrument Panel Wire and RH J/B (Right Side of the Instrument Panel Reinforcement)
4B	30	Instrument Panel Wire and Center J/B (Behind the Combination Meter)
4C		

: Connector Joining Wire Harness and Wire Harness

Code	See Page	Joining Wire Harness and Wire Harness (Connector Location)
IA4	40	Engine Room Main Wire and Instrument Panel Wire (Left Side of the Instrument Panel Reinforcement)
IA5		
IA6		
ID2	42	Instrument Panel Wire and Floor Wire (Left Kick Panel)
II2	42	Engine Wire and Instrument Panel Wire (Blower Unit RH)

: Ground Points

Code	See Page	Ground Points Location
EA	38	Front Right Fender
EB	38	Left Side of the Cylinder Head
ED	38	Front Left Suspension Tower
IE	40	Behind the Combination Meter

: **Splice Points**

Code	See Page	Wire Harness with Splice Points	Code	See Page	Wire Harness with Splice Points
E1	38	Engine Room Main Wire	I2	42	Instrument Panel Wire

K CONNECTOR LIST

A 1
Gray



A 2
Gray

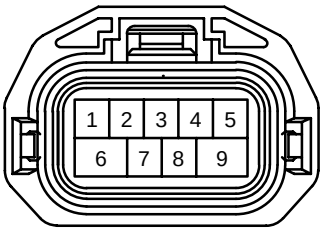

A 3
Gray



A 4



A 5
Yellow

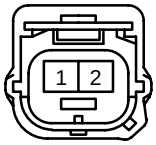

A 6
Yellow



A 7
Black



A 8
Black

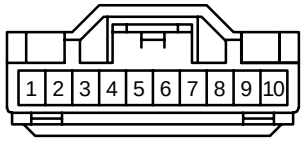

A10

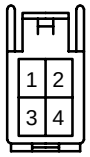

A11
Black

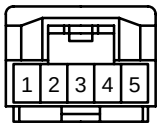

A12
Yellow

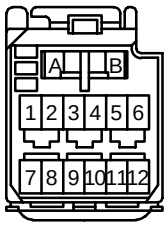

A13
Yellow

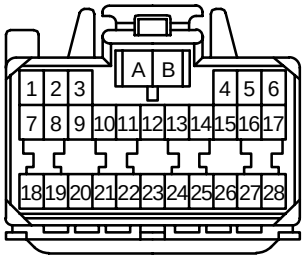

A14
Yellow

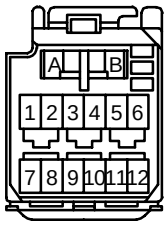

A15
Yellow

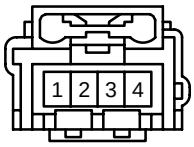

A16
Yellow

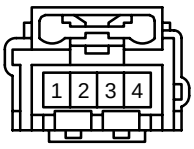

A17



A18

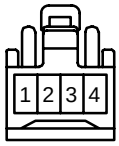

A19
Black



A20
Black



B 1
Gray



B 2
Gray



B 3

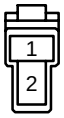

B 4
Black

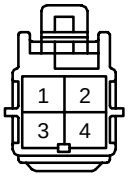

B 5

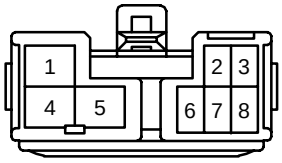

B 6

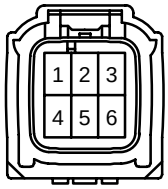

B 7

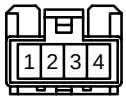

C 1
Gray



C 2
Brown



C 3
Gray



C 4
Black



C 5



C 6
Gray



C 7

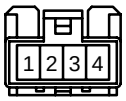

C 8

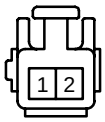

C 9

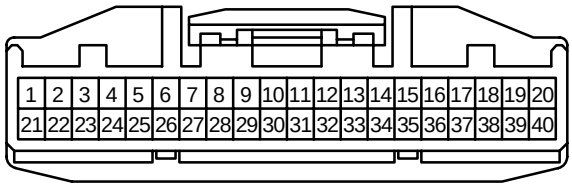

C10
Black

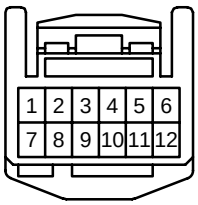

C11
Black

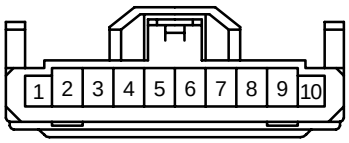

C12

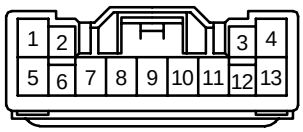

C13

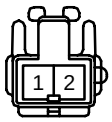

C14

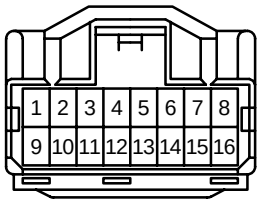

D 1

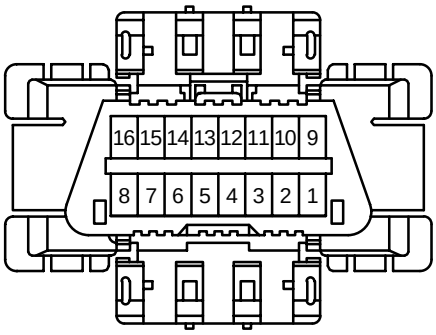

D 2

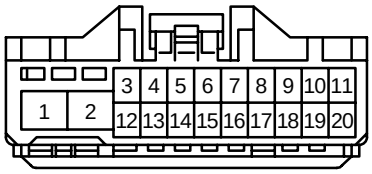

D 3

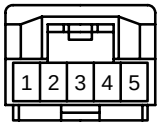

D 4



D 5



D 6



D 7



D 8

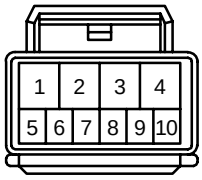

D 9

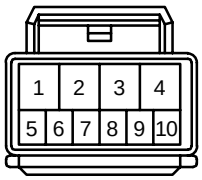

D10



D11

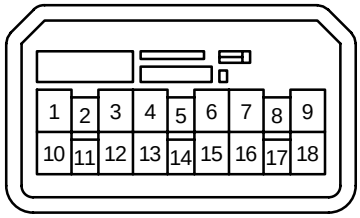

D12

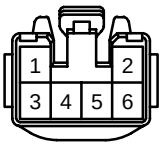

K CONNECTOR LIST

D13

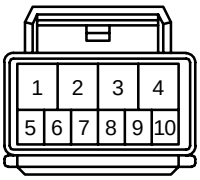

D14

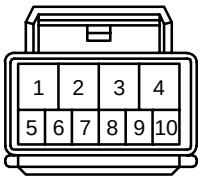

E 1
Gray

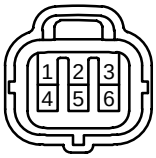

E 2
Dark Gray



E 3

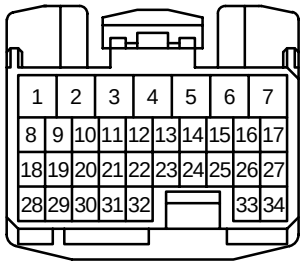

E 4

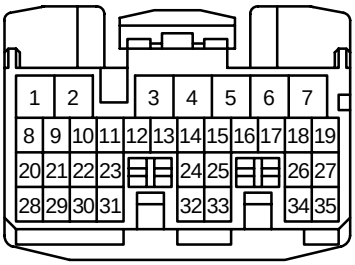

E 5

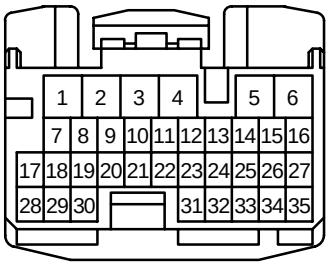

E 6

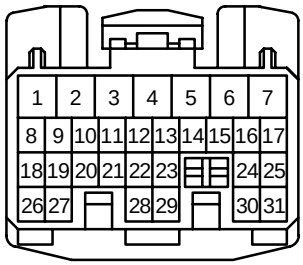

F 1
Gray

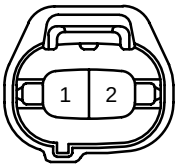

F 2
Gray

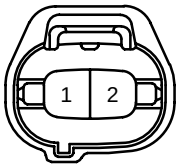

F 3
Gray



F 4
Gray



F 5
Black

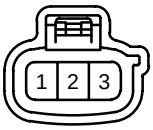

F 6
Black

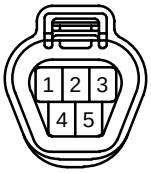

F 7

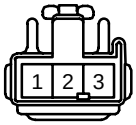

F 8



F 9



F10



G 1
Black

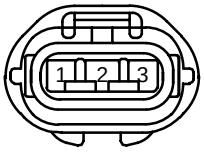

G 2

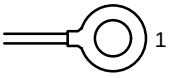

G 3



H 1
Black



H 2
Gray

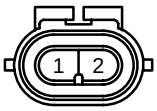

H 3
Black



H 4
Gray

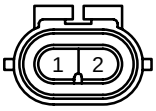

H 5
Dark Gray



H 6
Black

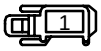

H 7
Black

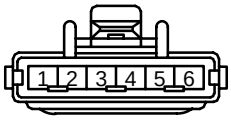

H 8
Dark Gray

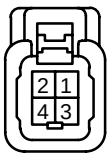

H 9
(Bulb Type) Gray

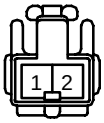

H 9
(LED Type) Black



I 1
Gray



I 2
Brown

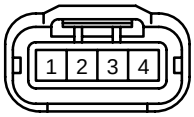

I 3
Brown

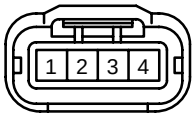

I 4
Brown

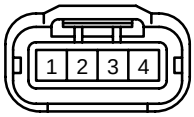

I 5
Brown

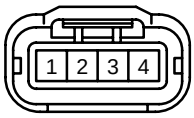

I 6
Gray

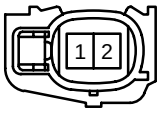

I 7
Gray

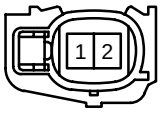

I 8
Gray

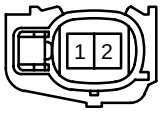

I 9
Gray

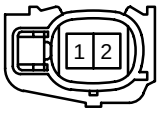

I10

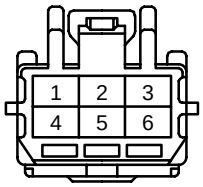

I11

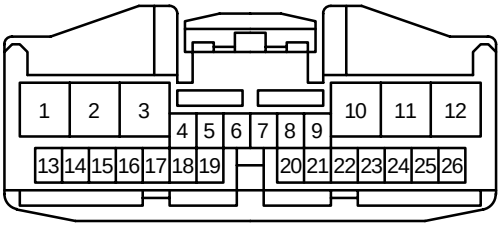

I12
Black

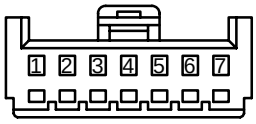

I13

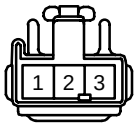

J 1
Black



J 2

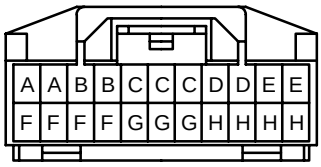

J 3

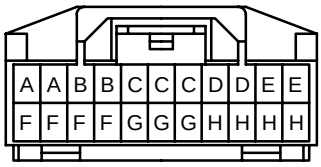

J 4

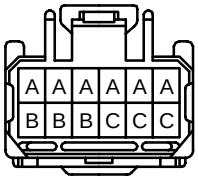

J 5

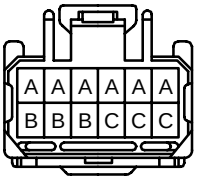

J 6

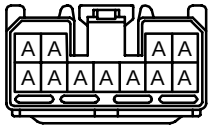

J 7

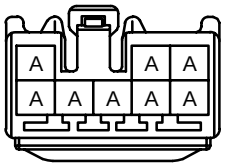

J 8

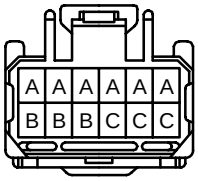

J 9

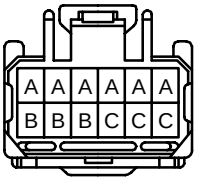

J10

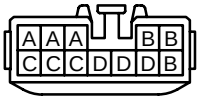

K 1
Black

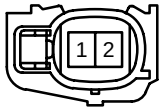

L 1
Gray



L 2
Gray



L 3



L 4



M 1
Black

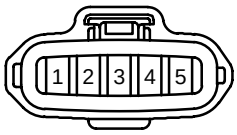

M 2



M 3
Brown

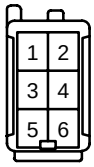

K CONNECTOR LIST

N 1
Gray



N 2

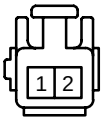

O 1
Gray



P 1
Black



P 2
Gray

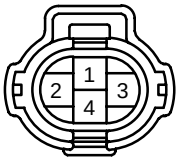

P 3
Brown



P 4



P 5

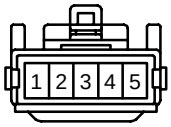

P 6

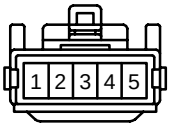

P 7

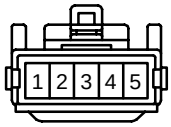

P 8

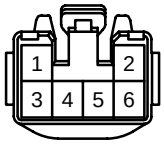

P 9

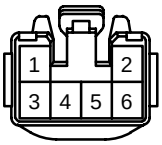

P10

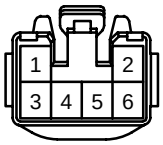

P11

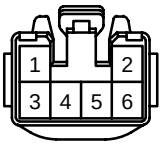

P12
Yellow

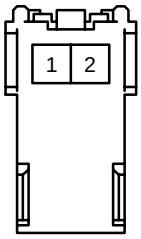

P13
Yellow

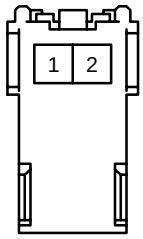

R 1
Gray

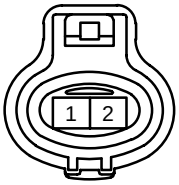

R 2
Black

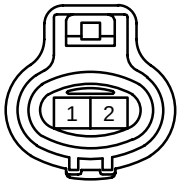

R 3

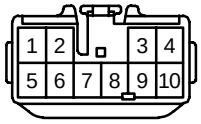

R 4



R 5
Black

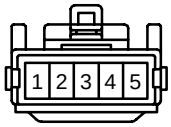

R 6

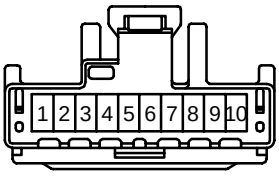

R 7

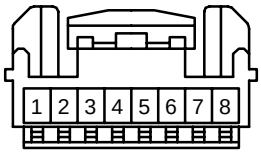

R 9

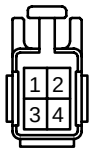

R10



R11

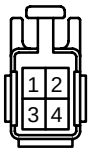

R12



R13



R14

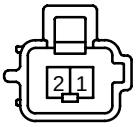

R15
Black



R16
Black



R17



*1 : w/ Cruise Control
*2 : w/o Cruise Control

R18



S 1
Black

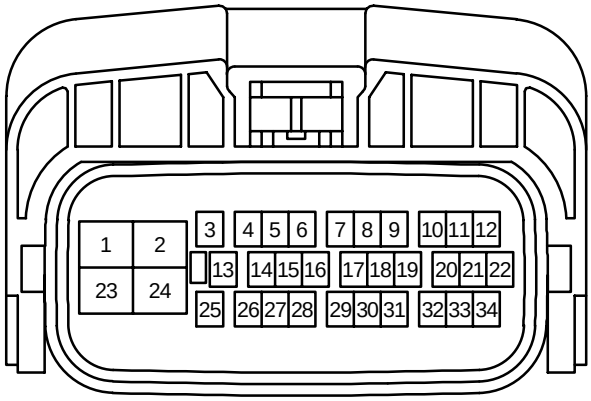

S 2

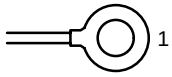

S 3
Black



S 4
Black

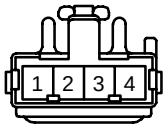

S 5

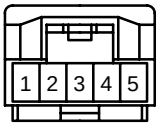

S 6
Yellow



S 7
Yellow



S 8

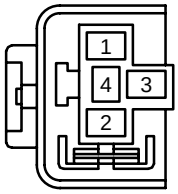

S 9
(*1) Blue

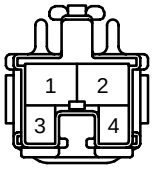

S 9
(*2) Black

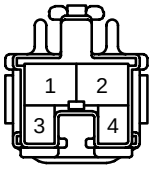

S10
Yellow

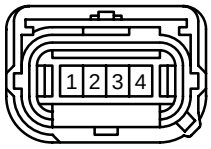

S11
Yellow

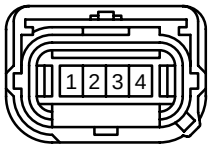

T 1
Black



T 2
Black



T 3

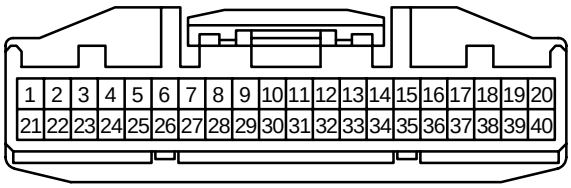

T 4



T 5



U 1
Black

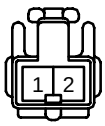

V 1
Black



V 2
Black



V 3
Blue

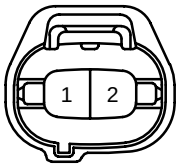

V 4
Black



V 5
Black



W 1
Black

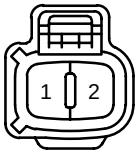

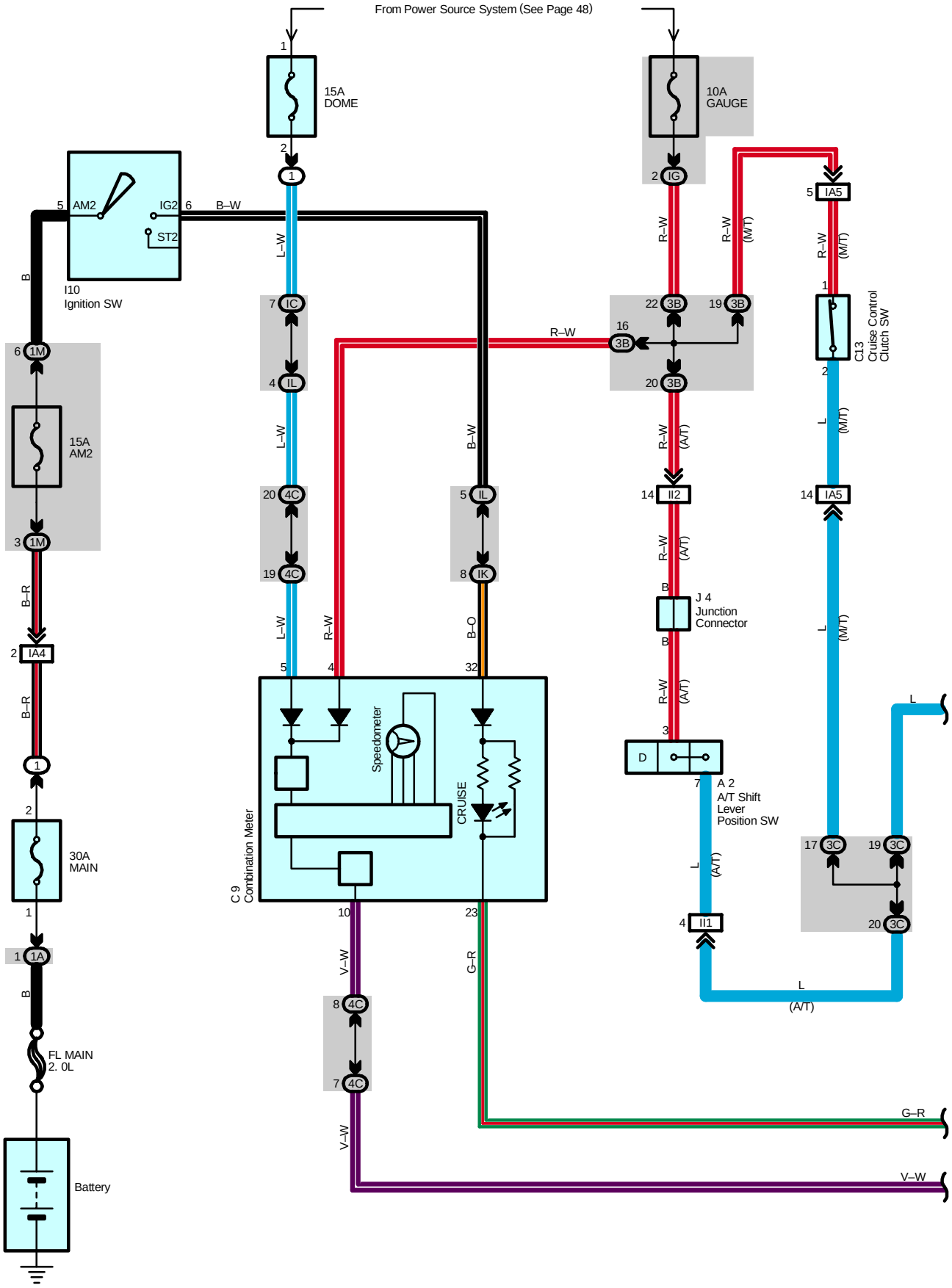
From Power Source System (See Page 48)
15A
DOME
10A
GAUGE
I10
Ignition SW
AM2
IG2
ST2
B–W
L–W
R–W
B
15A
AM2
30A
MAIN
FL MAIN
2. 0L
Battery
C 9
Combination Meter
Speedometer
CRUISE
J 4
Junction
Connector
A 2
A/T Shift
Lever
Position SW
C13
Cruise Control
Clutch SW
R–W (M/T)
L (M/T)
R–W (A/T)
L (A/T)
B–R
B–O
V–W
G–R
L

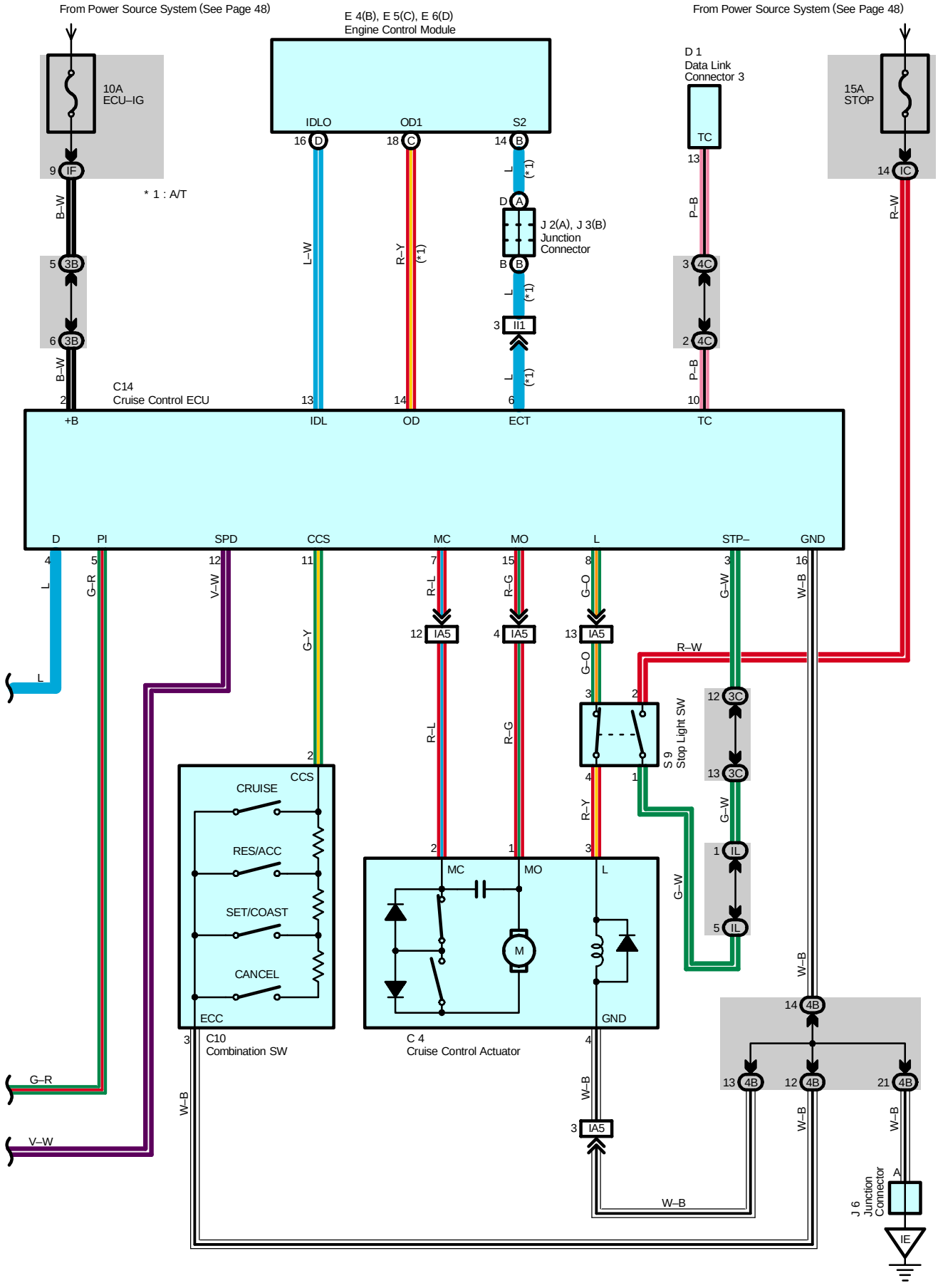
From Power Source System (See Page 48)
10A
ECU–IG
9 IF
B–W
5 3B
6 3B
B–W
2
* 1 : A/T
E 4(B), E 5(C), E 6(D)
Engine Control Module
IDLO
OD1
S2
16 D
18 C
14 B
L–W
R–Y (*1)
L (*1)
D A
J 2(A), J 3(B)
Junction
Connector
B B
L (*1)
3 II1
L (*1)
From Power Source System (See Page 48)
D 1
Data Link
Connector 3
TC
13
P–B
3 4C
2 4C
P–B
10
15A
STOP
14 IC
R–W
C14
Cruise Control ECU
+B
IDL
OD
ECT
TC
D
PI
SPD
CCS
MC
MO
L
STP–
GND
4
L
L
5
G–R
12
V–W
11
G–Y
7
R–L
12 IA5
15
R–G
4 IA5
8
G–O
13 IA5
G–O
3
2
R–W
3
G–W
16
W–B
12 3C
13 3C
S 9
Stop Light SW
4
1
R–Y
G–W
1 IL
5 IL
2
CCS
CRUISE
RES/ACC
SET/COAST
CANCEL
ECC
2
1
3
MC
MO
L
M
GND
G–W
W–B
14 4B
13 4B
12 4B
21 4B
W–B
W–B
W–B
3
4
3 IA5
W–B
J 6
Junction
Connector
A
IE
G–R
V–W
C10
Combination SW
C 4
Cruise Control Actuator

System Outline

The current is applied at all times through the STOP fuse to TERMINAL 2 of the stop light SW.
With the ignition SW turned to on, the current flows through the MAIN fuse to AM2 fuse to ignition SW (IG2) to TERMINAL 32 of the combination meter and the current through the ECU–IG fuse flows to TERMINAL 2 of the cruise control ECU.
When the ignition SW is on and the CRUISE SW is turned on, a signal is input from TERMINAL 2 of the cruise control SW to TERMINAL 1 of the cruise control ECU. As a result, the cruise control ECU functions and the current flows from the ECU–IG fuse to TERMINAL 2 of the cruise control ECU to TERMINAL 16 of the cruise control ECU to GROUND, and the cruise control system is in a condition ready for operation.
At the same time, the current flows through the MAIN fuse to AM2 fuse to ignition SW (IG2) to TERMINAL 32 of the cruise indicator light to TERMINAL 23 to TERMINAL 5 of the cruise control ECU to TERMINAL 16 to GROUND, causing the cruise indicator light to light up, indicating that cruise control is ready for operation.

1. Set Operation

When the CRUISE SW is turned on and the SET SW is pushed with the vehicle speed within the set limit (Approx. 40 km/h, 25 mph to 200 km/h, 124 mph), a signal is input to TERMINAL 11 of the cruise control ECU, and the vehicle speed at the time the SET SW is released is memorized in the ECU as the set speed.

2. Set Speed Control

During cruise control driving, the ECU compares the set speed memorized in the ECU with the actual vehicle speed input into TERMINAL 12 of the cruise control ECU from the combination meter, and controls the cruise control actuator to maintain the set speed.
When the actual speed is lower than the set speed, the ECU causes the current to the cruise control actuator to flow from TERMINAL 15 of the cruise control ECU to TERMINAL 1 of the cruise control actuator to TERMINAL 2 to TERMINAL 7 of the cruise control ECU. As a result, the motor in the cruise control actuator is rotated to open the throttle valve and the throttle cable is pulled to increase the vehicle speed. When the actual driving speed is higher than the set speed, the current to the cruise control actuator flows from TERMINAL 7 of the ECU to TERMINAL 2 of the cruise control actuator to TERMINAL 1 to TERMINAL 15 of the cruise control ECU.
This causes the motor in the cruise control actuator to rotate to close the throttle valve and return the throttle cable to decrease the vehicle speed.

3. Coast Control

During cruise control driving, while the COAST SW is on, the cruise control actuator returns the throttle cable to close the throttle valve and decrease the driving speed. The vehicle speed when the COAST SW is turned off is memorized, and the vehicle continues at the new set speed.

4. Accel Control

During cruise control driving, while the ACC SW is turned on, the cruise control actuator pulls the throttle cable to open the throttle valve and increase the driving speed.
The vehicle speed when the ACC SW is turned off is memorized and the vehicle continues at the new set speed.

5. Resume Control

Unless the vehicle speed falls below the minimum speed limit (Approx. 40km/h, 25mph) after canceling the set speed by the CANCEL SW, pushing the RES SW will cause the vehicle to resume the speed set before cancellation.

6. Manual Cancel Mechanism

If any of the following operations occurs during cruise control operation, the magnetic clutch of the actuator turns off and the motor rotates to close the throttle valve and the cruise control is released.

- Placing the shift lever to positions except ”D” position (Park/Neutral position SW except ”D” position)(A/T), depressing the clutch pedal (Cruise control clutch SW off)(M/T). ”Signal is not input to TERMINAL 4 of the ECU”
- Depressing the brake pedal (Stop light SW on). ”Signal input to TERMINAL 3 of the ECU”
- Pushing the CANCEL SW (CANCEL SW on). ”Signal input to TERMINAL 1 of the ECU”
- Pushing the CRUISE SW off ”signal input to TERMINAL 1 of the ECU”.

7. Tap–Up Control Function

When the difference between the actual vehicle speed and the set speed is less than 5 km/h (3 mph), the set speed can be increased 1.6 km/h (1 mph) each time by operating the RES/ACC SW quickly within 0.6 seconds.

8. Tap–Down Control Function

When the difference between the actual vehicle speed and the set speed is less than 5 km/h (3 mph), the set speed can be lowered 1.6 km/h (1 mph) each time by operating the SET COAST SW quickly within 0.6 seconds.

9. Auto Cancel Function

A) If any of the following operating conditions occurs during cruise control operation, the set speed is erased, current flow to the magnetic clutch is stopped and the cruise control is released, (CRUISE SW turns off).
When this occurs, the ignition SW must be turned off once before the CRUISE SW will turn on.

* When current continues to flow to the motor inside the actuator in the throttle valve "OPEN" direction.
* The motor does not operate despite the motor drive signal being output.

B) If any of the following operating conditions occurs during cruise control operation, the set speed is erased, current flow to the magnetic clutch is stopped and the cruise control is released. (CRUISE SW turn off).
When this occurs, the cancel state is cleared as the CRUISE SW will turn on again.

* Over current to transistor driving the motor or the magnetic clutch.
* Open circuit in the magnetic clutch.
* Momentary interruption of vehicle speed signal.
* Short circuit in the cruise control SW.

C) If any of the following conditions occurs during cruise control operation, the set speed is erased and the cruise control is released. (The power to the magnetic clutch is cut off until the SET SW is "ON" again.)

* When the vehicle speed falls below the minimum speed limit, approx. 40 km/h (25 mph)
* When power to the cruise control system is momentarily cut off.

10. Automatic Transaxle Control Function (A/T)

* In overdrive. If the vehicle speed becomes lower than the overdrive cut speed (Set speed minus approx. 4 km/h, 2.5 mph) during cruise control operation, such as driving up a hill, the overdrive is released and the power is increased to prevent a reduction in vehicle speed.
* After releasing the overdrive, if the vehicle speed becomes higher than the overdrive return speed (Set speed minus approx. 2 km/h, 1.2 mph) and the ECU judges by the signals from the actuator's potentiometer that the upward slope has finished, the overdrive is resumed after approximately 2 seconds.
* During cruise control driving, the cruise control operation signal is output from the cruise control ECU to the engine control module. Upon receiving this signal, the engine control module changes the shift pattern to normal.
  To maintain smooth cruise control operation (on a downward slope etc.), the lock–up release of the transaxle when the idling point of the throttle position is "ON" is forbidden.

Service Hints

C10 Combination SW

2–3 : Continuity with the CRUISE SW on
2–3 : Approx. 1540 Ω with the CANCEL SW on
Approx. 240 Ω with the RES/ACC SW on
Approx. 630 Ω with the SET/COAST SW on

C14 Cruise Control ECU

2–Ground : 12 volts with the ignition SW at ON position
1–Ground : Approx. 1540 Ω with the CANCEL SW on in the control SW
Approx. 630 Ω with the SET/COAST SW on in the control SW
Approx. 240 Ω with the RES/ACC SW on in the control SW
16–Ground : Always continuity

○ : Parts Location

Code	See Page	Code	See Page	Code	See Page
A2	32	D1	34	J3 B	35
C4	32	E4 B	34	J4	35
C9	34	E5 C	34	J6	35
C10	34	E6 D	34	S9	35
C13	34	I10	35		
C14	34	J2 A	35		

▭ : Relay Blocks

Code	See Page	Relay Blocks (Relay Block Location)
1	22	Engine Room R/B (Engine Compartment Left)

: **Junction Block and Wire Harness Connector**

Code	See Page	Junction Block and Wire Harness (Connector Location)
IC	25	Engine Room Main Wire and Instrument Panel J/B (Lower Finish Panel)
IF	25	Instrument Panel Wire and Instrument Panel J/B (Lower Finish Panel)
IG		
IK	24	
IL		
IM		
1A	22	Engine Wire and Engine Room J/B (Engine Compartment Left)
3B	28	Instrument Panel Wire and RH J/B (Right Side of the Instrument Panel Reinforcement)
3C		
4B	30	Instrument Panel Wire and Center J/B (Behind the Combination Meter)
4C		

: **Connector Joining Wire Harness and Wire Harness**

Code	See Page	Joining Wire Harness and Wire Harness (Connector Location)
IA4	40	Engine Room Main Wire and Instrument Panel Wire (Left Side of the Instrument Panel Reinforcement)
IA5		
II1	42	Engine Wire and Instrument Panel Wire (Blower Unit RH)
II2		

: **Ground Points**

Code	See Page	Ground Points Location
IE	40	Behind the Combination Meter

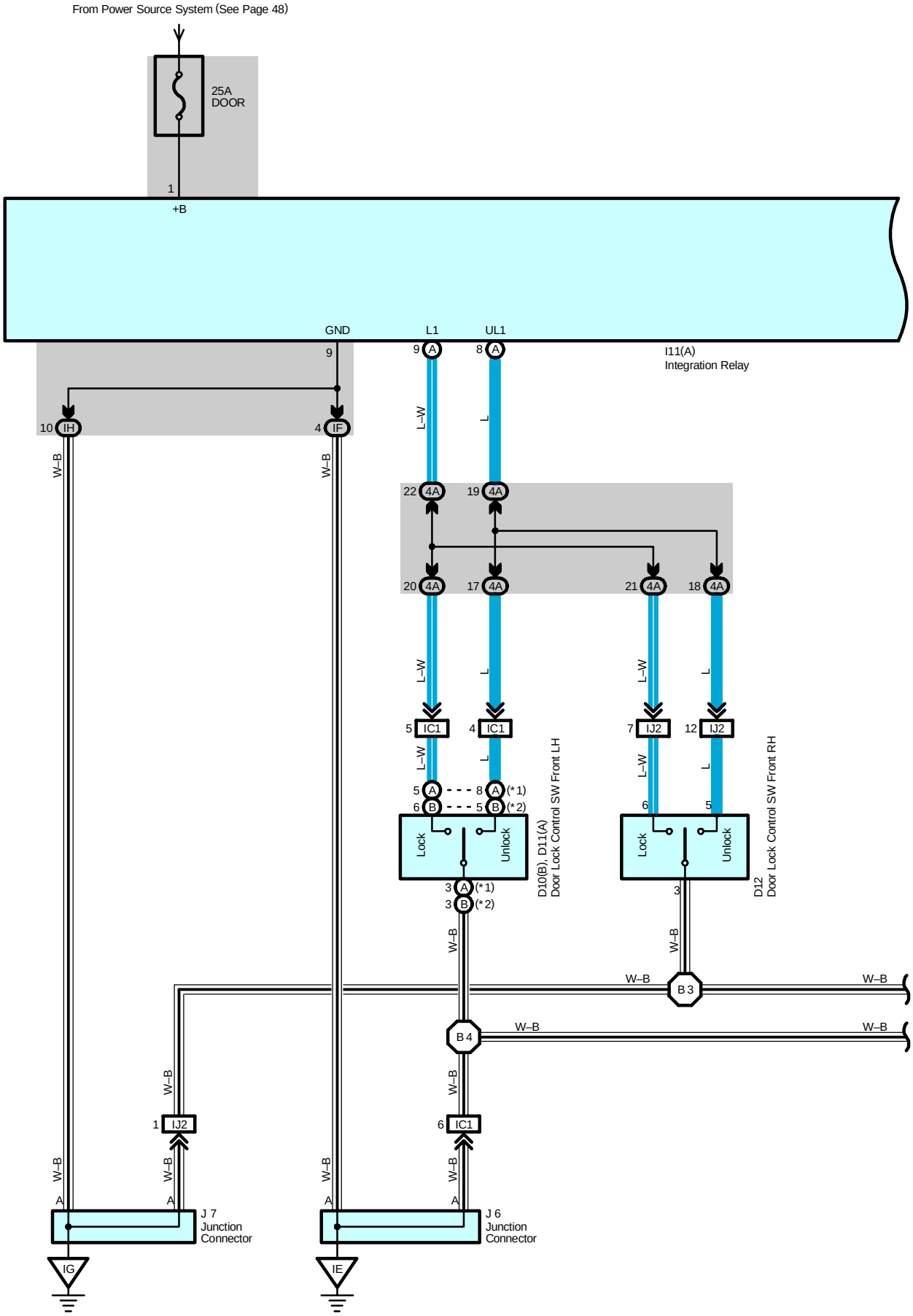
From Power Source System (See Page 48)
25A
DOOR
1
+B
GND
L1
UL1
9
9
8
I11(A)
Integration Relay
10 IH
4 IF
L–W
L
W–B
W–B
22 4A
19 4A
20 4A
17 4A
21 4A
18 4A
5 IC1
4 IC1
7 IJ2
12 IJ2
5 A
6 B
8 A (*1)
5 B (*2)
Lock
Unlock
3 A (*1)
3 B (*2)
D10(B), D11(A)
Door Lock Control SW Front LH
D12
Door Lock Control SW Front RH
B 3
B 4
1 IJ2
6 IC1
A
J 7
Junction
Connector
J 6
Junction
Connector
IG
IE

* 1 : w/ Power Window
* 2 : w/o Power Window

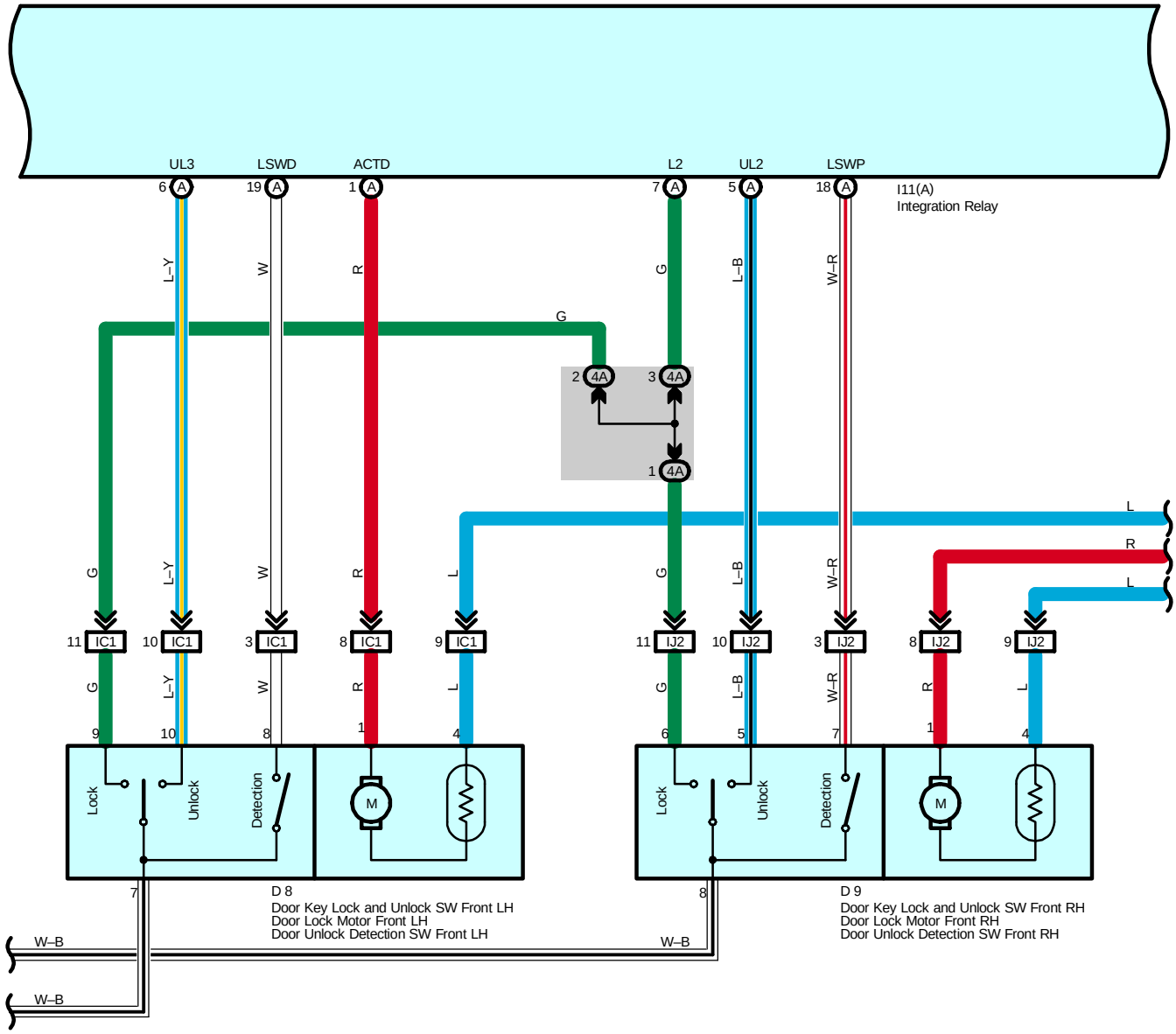

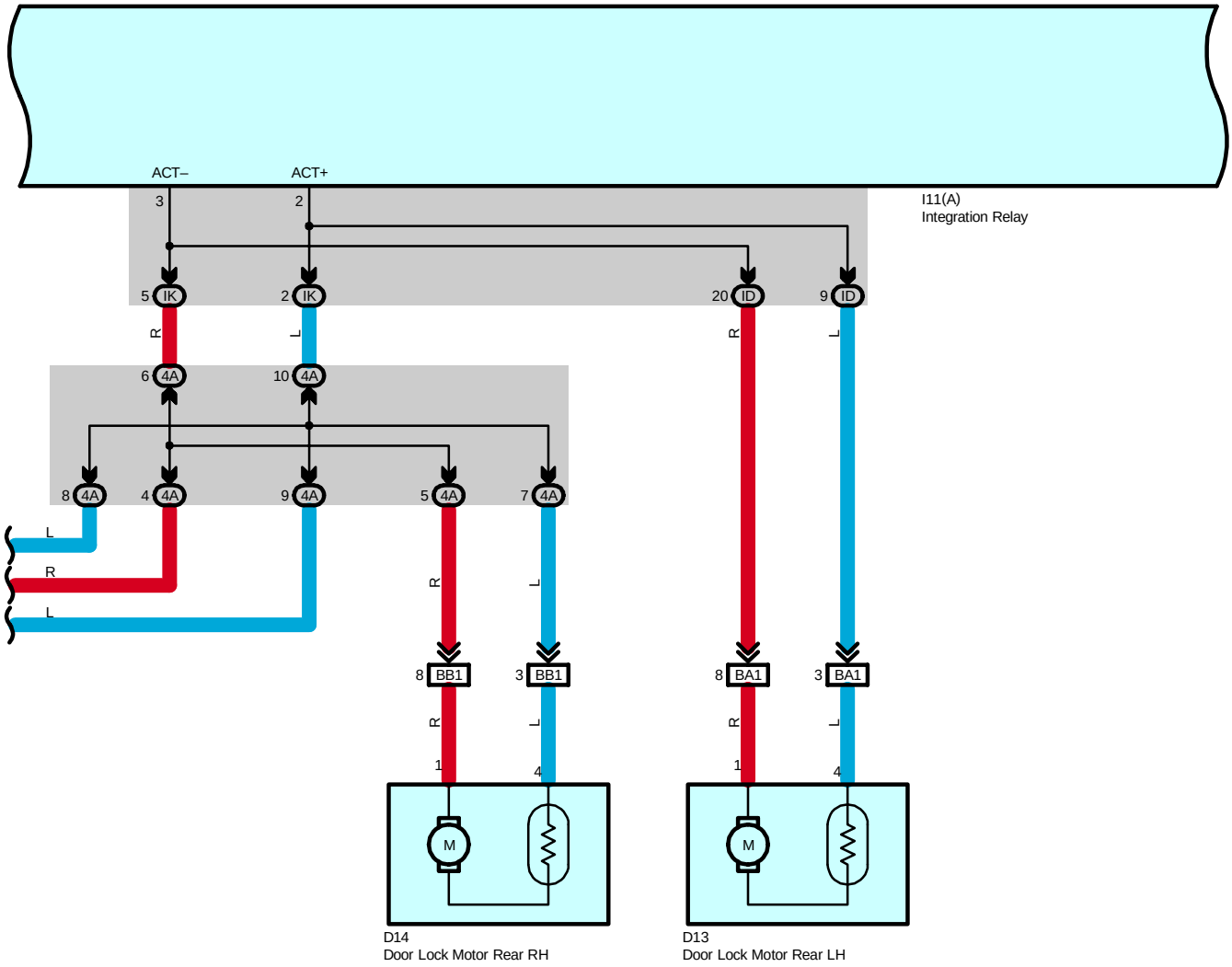
ACT–
ACT+
3
2
I11(A)
Integration Relay
5 IK
2 IK
20 ID
9 ID
R
L
R
L
6 4A
10 4A
8 4A
4 4A
9 4A
5 4A
7 4A
L
R
L
R
L
8 BB1
3 BB1
8 BA1
3 BA1
R
L
R
L
1
4
1
4
M
M
D14
Door Lock Motor Rear RH
D13
Door Lock Motor Rear LH

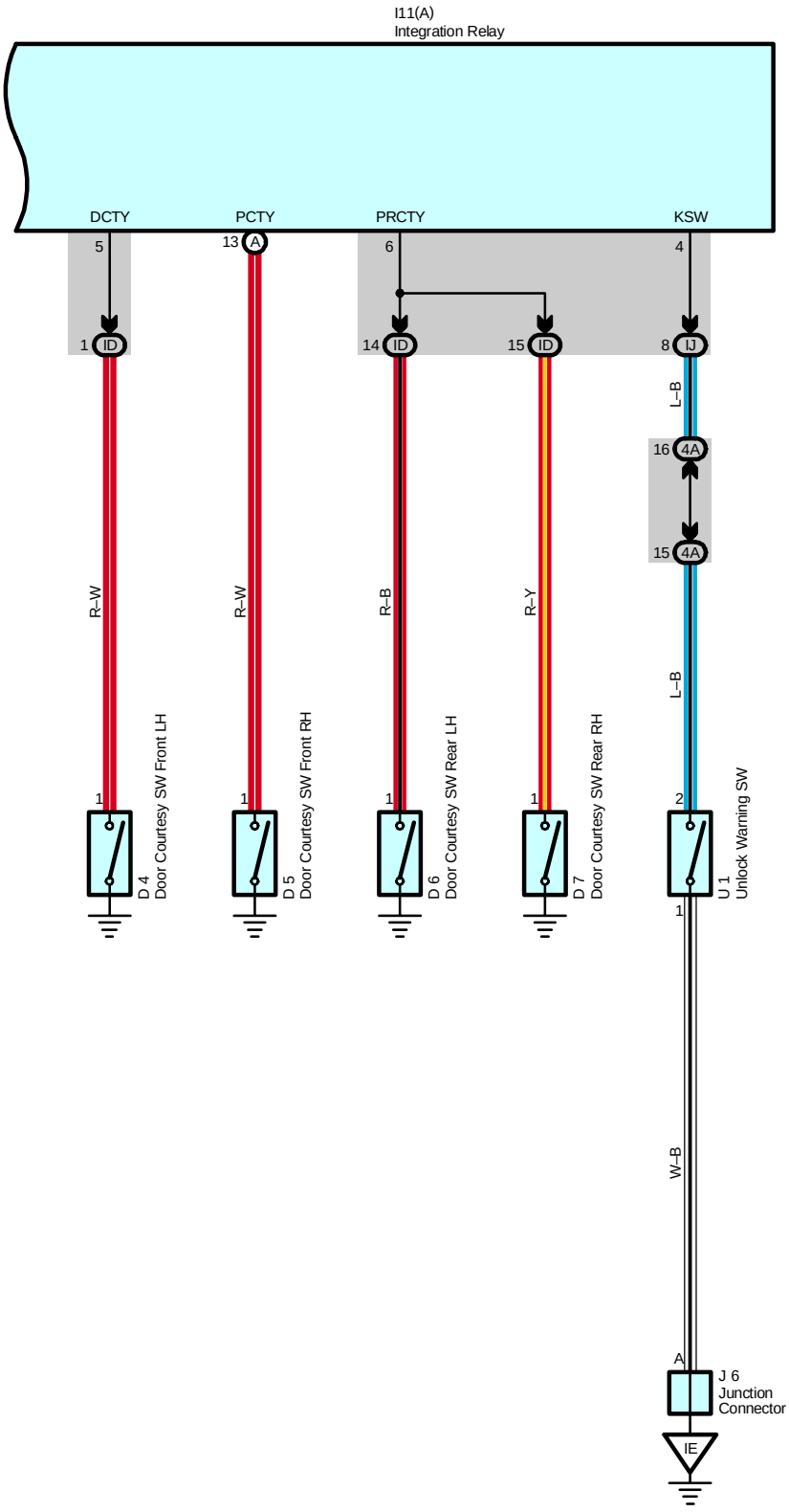
I11(A)
Integration Relay
DCTY
PCTY
PRCTY
KSW
5
1 ID
13 A
6
14 ID
15 ID
4
8 IJ
L–B
16 4A
15 4A
R–W
R–W
R–B
R–Y
L–B
1
D 4
Door Courtesy SW Front LH
D 5
Door Courtesy SW Front RH
D 6
Door Courtesy SW Rear LH
D 7
Door Courtesy SW Rear RH
2
U 1
Unlock Warning SW
W–B
A
J 6
Junction
Connector
IE

Door Lock Control

System Outline

The current always flows to TERMINAL 1 of the integration relay through the DOOR fuse.

1. Manual Lock Operation

When the door lock control SW or door key lock and unlock SW are operated to Lock position, a lock signal is input to TERMINAL (A) 9 or (A) 7 of the integration relay and causes the relay to function. The current flows from TERMINAL 1 of the relay to TERMINAL 2 to the door lock motors to TERMINALS (A) 1 and 3 of the relay to TERMINAL 9 to GROUND and the door lock motors locks the door.

2. Manual Unlock Operation

When the door lock control SW or door key lock and unlock SW are operated to Unlock position, an unlock signal is input to TERMINAL (A) 8, (A) 6 or (A) 5 of the integration relay and causes the relay to function. The current flows from TERMINAL 1 of the relay to TERMINALS (A) 1 and 3 to the door lock motors to TERMINAL 2 of the relay to TERMINAL 9 to GROUND and the door lock motors unlocks the door.

3. Double Operation Unlock Operation

When the door key lock and unlock SW LH is turned to the unlock side, only the driver's door is unlocked. By turning the door key lock and unlock SW LH to the unlock side, a signal is input to TERMINAL (A) 6 of the relay, and if the signal is input again within 3 seconds by turning the SW to the unlock side again, current flows from TERMINAL 3 of the integration relay to the door lock motors to TERMINAL 2 of the relay to TERMINAL 9 to GROUND, causing the door lock motors to operate and unlock the doors.

4. Ignition Key Reminder Operation

* Operating door lock knob (Operation of door lock motors)
  With the ignition key in the cylinder (Unlock warning SW on), when the door is opened and locked using door lock knob (Door lock motor), the door is locked once but each door is unlocked soon by the function of the relay. As a result, the current flows from TERMINAL 1 of the integration relay to TERMINALS (A) 1 and 3 to the door lock motors to TERMINAL 2 of the relay to TERMINAL 9 to GROUND and unlocks all the doors.
* Operating door lock control SW or door key lock and unlock SW
  With the ignition key in the cylinder (Unlock warning SW on), when the door is opened and locked using door lock control SW or key SW, the door is locked once but each door is unlocked by the function of SW contained in motors, and the signal is input to TERMINAL (A) 19 of the relay. According to this input signal, the current flows from TERMINAL 1 of the relay to TERMINALS (A) 1 and 3 to the door lock motors to TERMINAL 2 of the relay to TERMINAL 9 to GROUND and unlocks all the doors.
* In case of key less lock
  With the ignition the key in the cylinder (Unlock warning SW on), when the unlock function is disturbed, for example pushing the door lock knob etc., the door holds on lock condition. After closing the door after, door courtesy SW inputs the signal into TERMINAL 5 or 6 or (A) 13 of the integration relay. By this input signal, the relay works and current flows from TERMINAL 1 of the relay to TERMINALS (A) 1 and 3 to the door lock motors to TERMINAL 2 of the relay to TERMINAL 9 to GROUND and unlocks all the doors.

Service Hints

I11 (A) Integration Relay

9–Ground : Always continuity
5–Ground : Continuity with the driver's door open
1–Ground : Always approx. 12 volts
2–Ground : Approx. 12 volts 0.2 seconds with following operation
∗ Door lock control SW locked
∗ Locking the driver's, front passenger's door cylinder with the key
(A) 9–Ground : Continuity with the door lock control SW locked
(A)13–Ground : Continuity with the front passenger's door open
(A)19–Ground : Continuity with the driver's door lock knob unlocked
(A) 8–Ground : Continuity with the door lock control SW unlocked
(A) 5–Ground : Continuity with the front passenger's door lock cylinder unlock with the key
(A) 6–Ground : Continuity with the driver's door lock cylinder unlocked with the key
(A) 7–Ground : Continuity with the driver's, front passenger's door lock cylinder locked with the key
(A) 1 or 3–Ground : Approx. 12 volts 0.2 seconds with following operation
∗ Door lock control SW unlocked
∗ Door lock control SW locked with the ignition key in cylinder and the driver's door open (Ignition key reminder function)
∗ Door lock knob locked with the ignition key in cylinder and the driver's door open (Ignition key reminder function)
∗ Unlocking the driver's, front passenger's door cylinder with the key

D4, D5, D6, D7 Door Courtesy SW Front LH, RH, Rear LH, RH

1–Ground : Closed with the door open

U1 Unlock Warning SW

1–2 : Closed with the ignition key in cylinder

○ : Parts Location

Code	See Page	Code	See Page	Code	See Page
D4	36	D9	36	D14	36
D5	36	D10 B	36	I11 A	35
D6	36	D11 A	36	J6	35
D7	36	D12	36	J7	35
D8	36	D13	36	U1	35

⬭ : Junction Block and Wire Harness Connector

Code	See Page	Junction Block and Wire Harness (Connector Location)
ID	25	Floor Wire and Instrument Panel J/B (Lower Finish Panel)
IF	25	Instrument Panel Wire and Instrument Panel J/B (Lower Finish Panel)
IH		
IJ		
IK	24	
4A	30	Instrument Panel Wire and Center J/B (Behind the Combination Meter)

▭ : Connector Joining Wire Harness and Wire Harness

Code	See Page	Joining Wire Harness and Wire Harness (Connector Location)
IC1	40	Front Door LH Wire and Instrument Panel Wire (Left Kick Panel)
IJ2	42	Front Door RH Wire and Instrument Panel Wire (Right Kick Panel)
BA1	44	Rear Door LH Wire and Floor Wire (Left Center Pillar)
BB1	44	Rear Door RH Wire and Instrument Panel Wire (Right Center Pillar)

▽ : Ground Points

Code	See Page	Ground Points Location
IE	40	Behind the Combination Meter
IG	40	Right Kick Panel

Door Lock Control

 **: Splice Points**

Code	See Page	Wire Harness with Splice Points	Code	See Page	Wire Harness with Splice Points
B3	44	Front Door RH Wire	B4	44	Front Door LH Wire

Automatic Glare–Resistant EC Mirror with Compass

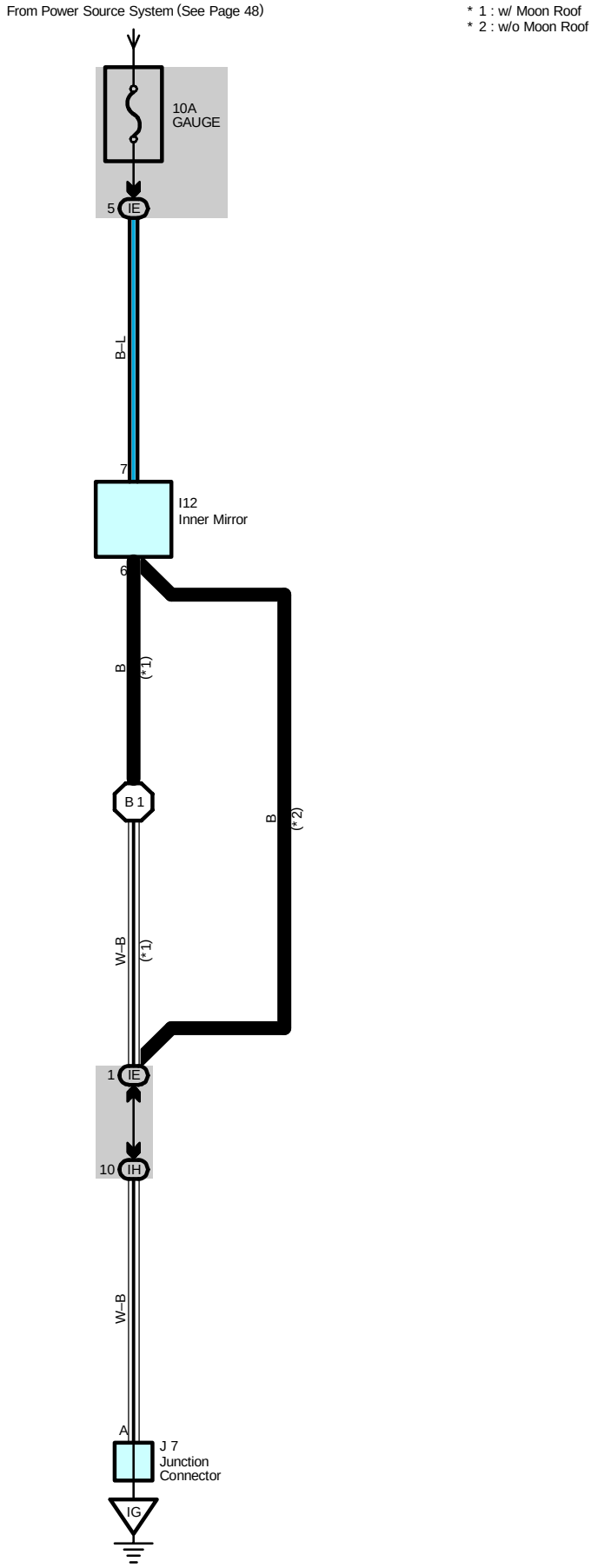

Service Hints

I12 Inner Mirror

7–Ground : Approx. 12 volts with the ignition SW at ON position

6–Ground : Always continuity

: Parts Location

Code	See Page	Code	See Page	Code	See Page
I12	36	J7	35		

: Junction Block and Wire Harness Connector

Code	See Page	Junction Block and Wire Harness (Connector Location)
IE	25	Roof Wire and Instrument Panel J/B (Lower Finish Panel)
IH	25	Instrument Panel Wire and Instrument Panel J/B (Lower Finish Panel)

: Ground Points

Code	See Page	Ground Points Location
IG	40	Right Kick Panel

: Splice Points

Code	See Page	Wire Harness with Splice Points	Code	See Page	Wire Harness with Splice Points
B1	44	Roof Wire			

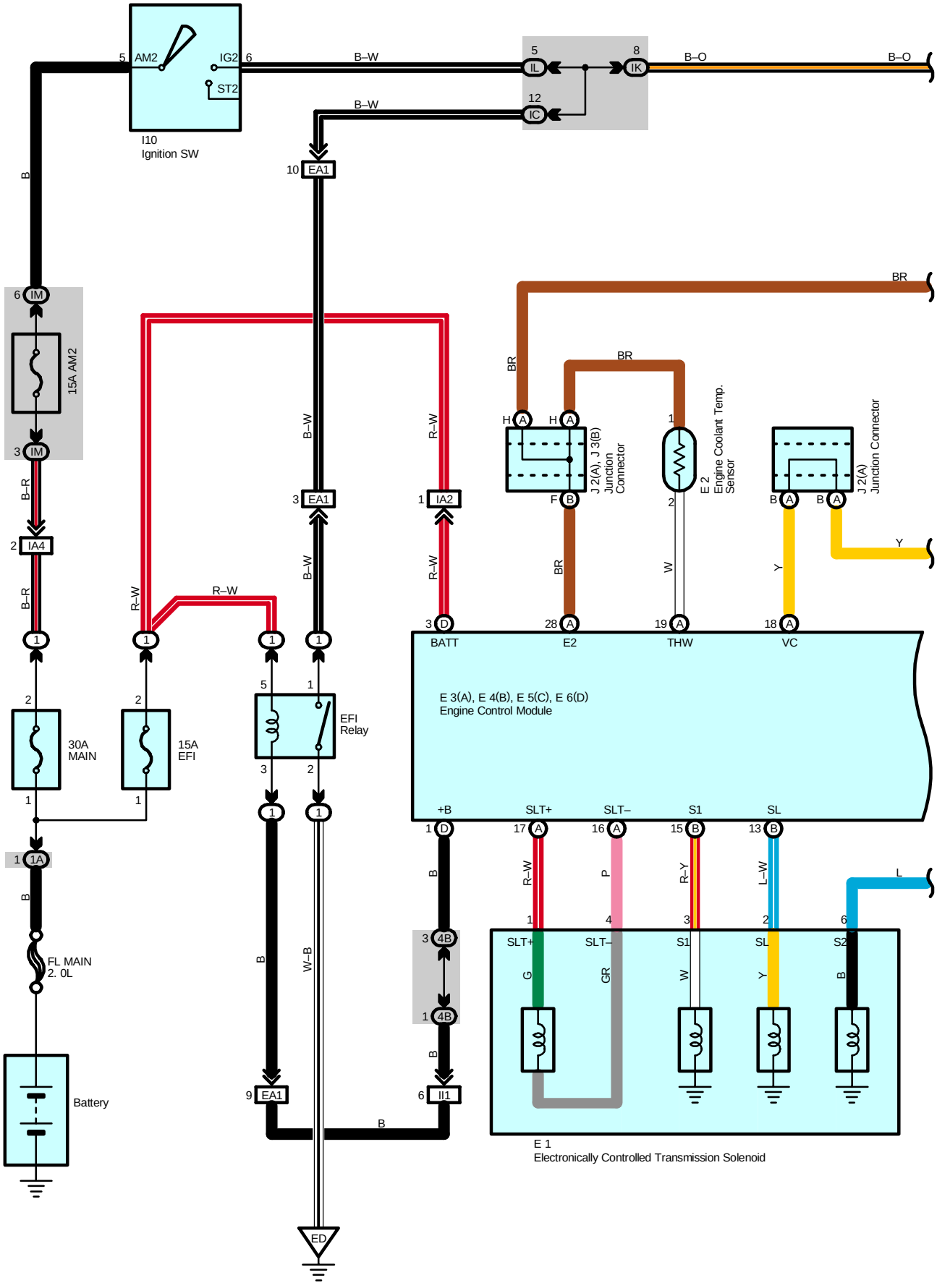

AM2
IG2
ST2
I10
Ignition SW
B–W
B–O
IL
IK
IC
EA1
IM
15A AM2
B–R
IA4
IA2
30A
MAIN
15A
EFI
EFI
Relay
BR
J 2(A), J 3(B)
Junction
Connector
E 2
Engine Coolant Temp.
Sensor
J 2(A)
Junction Connector
Y
BATT
E2
THW
VC
E 3(A), E 4(B), E 5(C), E 6(D)
Engine Control Module
+B
SLT+
SLT–
S1
SL
1A
FL MAIN
2. 0L
Battery
4B
II1
W–B
ED
L
SLT+
SLT–
S1
SL
S2
E 1
Electronically Controlled Transmission Solenoid

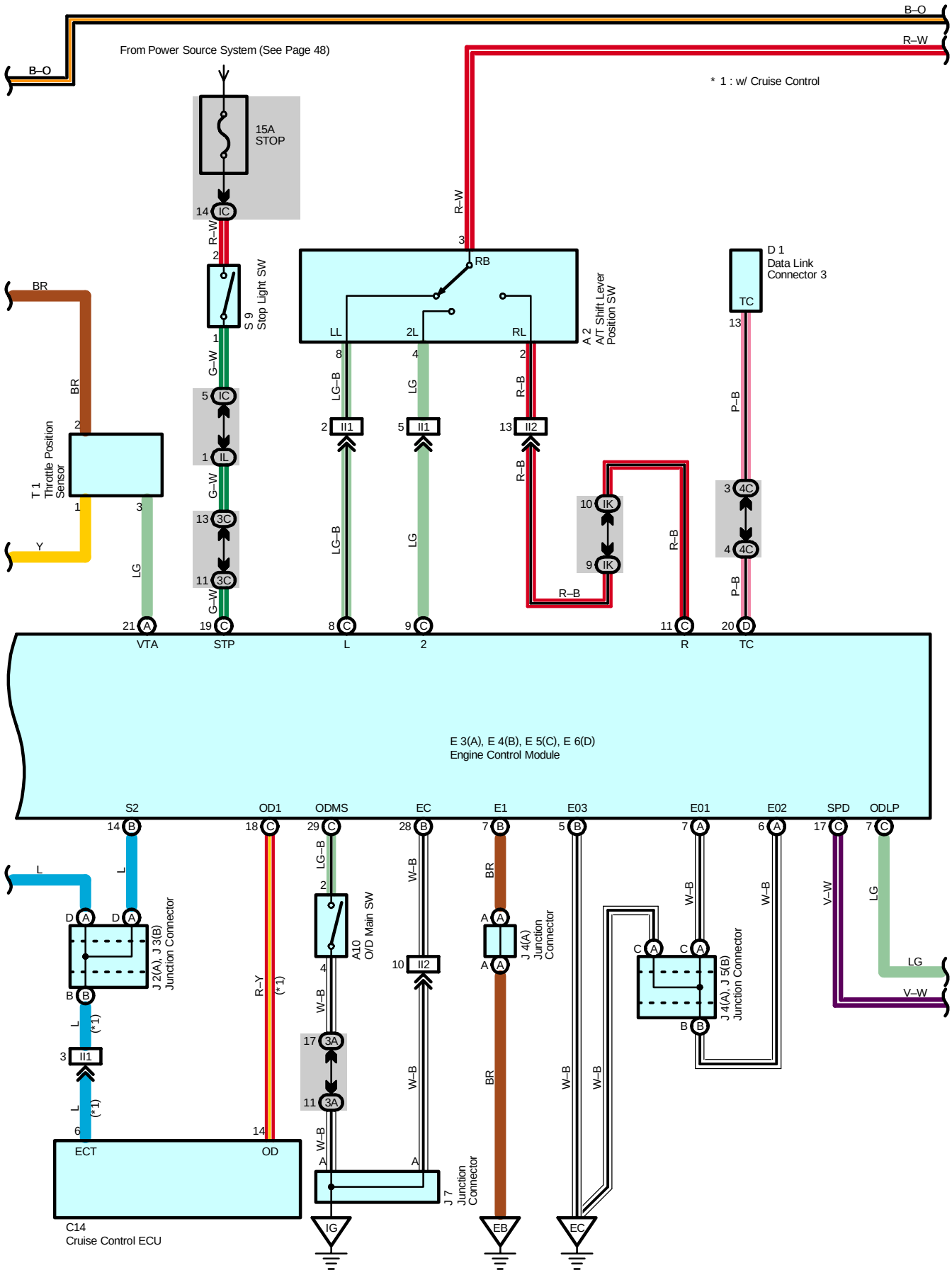
B–O
R–W
From Power Source System (See Page 48)
* 1 : w/ Cruise Control
15A
STOP
14 IC
R–W
2
S 9
Stop Light SW
1
G–W
5 IC
1 IL
G–W
13 3C
11 3C
G–W
19 C
STP
BR
BR
2
T 1
Throttle Position
Sensor
1
Y
3
LG
21 A
VTA
3
RB
LL
2L
RL
A 2
A/T Shift Lever
Position SW
8
LG–B
2 II1
LG–B
8 C
L
4
LG
5 II1
LG
9 C
2
2
R–B
13 II2
R–B
10 IK
9 IK
R–B
R–B
11 C
R
D 1
Data Link
Connector 3
TC
13
P–B
3 4C
4 4C
P–B
20 D
TC
E 3(A), E 4(B), E 5(C), E 6(D)
Engine Control Module
S2
OD1
ODMS
EC
E1
E03
E01
E02
SPD
ODLP
14 B
18 C
29 C
28 B
7 B
5 B
7 A
6 A
17 C
7 C
L
L
D A
D A
J 2(A), J 3(B)
Junction Connector
B B
L
(*1)
3 II1
L
(*1)
6
ECT
R–Y
(*1)
14
OD
LG–B
2
A10
O/D Main SW
4
W–B
17 3A
11 3A
W–B
A
A
J 7
Junction
Connector
IG
W–B
10 II2
W–B
A
BR
A A
A A
J 4(A)
Junction
Connector
BR
EB
W–B
W–B
EC
W–B
C A
C A
J 4(A), J 5(B)
Junction Connector
B B
W–B
V–W
LG
V–W
C14
Cruise Control ECU

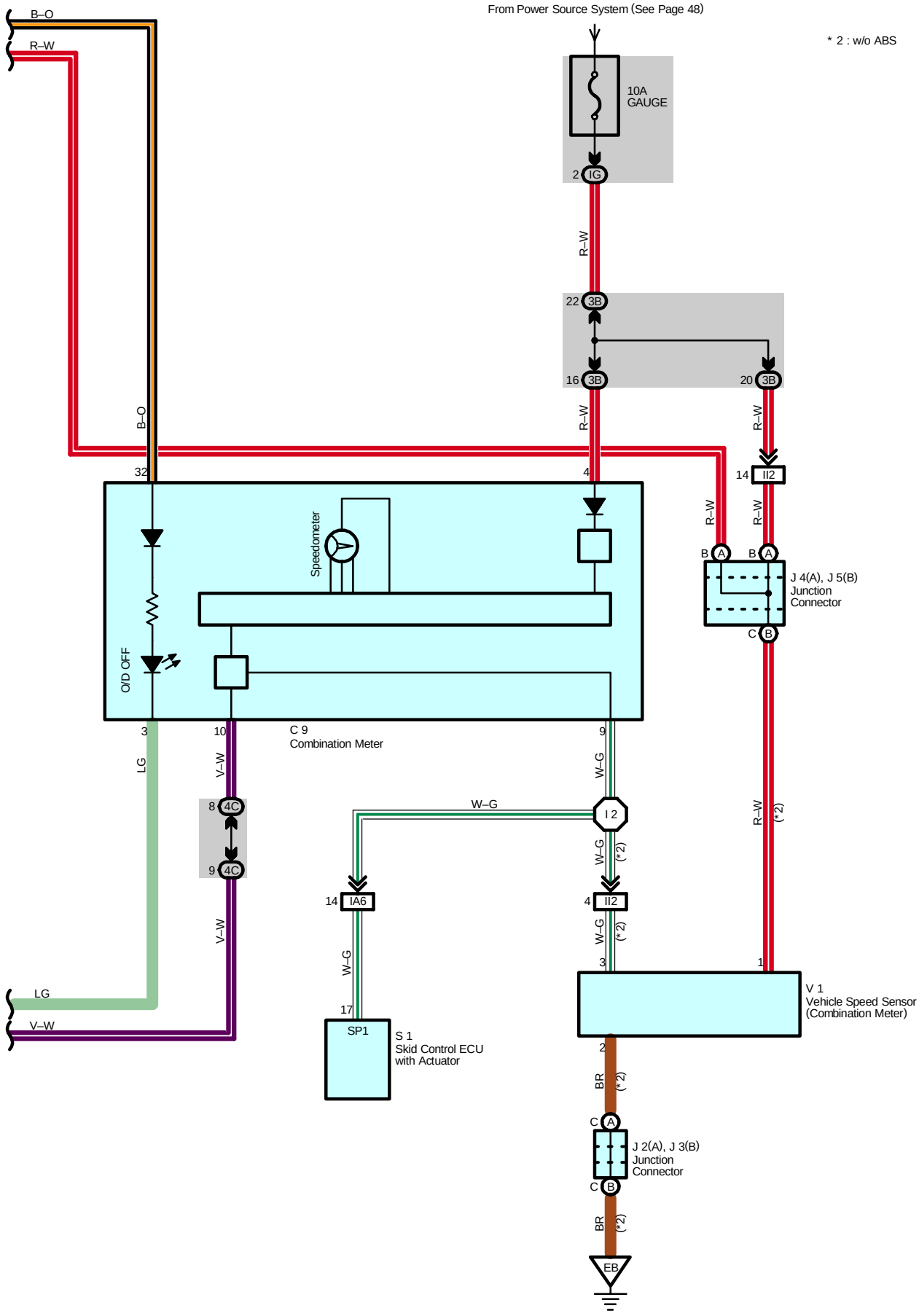
From Power Source System (See Page 48)
* 2 : w/o ABS
B–O
R–W
10A
GAUGE
2 IG
R–W
22 3B
16 3B
20 3B
R–W
R–W
B–O
32
4
14 II2
R–W
R–W
B A
B A
J 4(A), J 5(B)
Junction
Connector
C B
Speedometer
O/D OFF
3
10
C 9
Combination Meter
9
LG
V–W
W–G
8 4C
9 4C
W–G
I 2
W–G
(*2)
R–W
(*2)
14 IA6
4 II2
W–G
(*2)
W–G
(*2)
3
1
17
SP1
S 1
Skid Control ECU
with Actuator
V 1
Vehicle Speed Sensor
(Combination Meter)
LG
V–W
2
BR
(*2)
C A
J 2(A), J 3(B)
Junction
Connector
C B
BR
(*2)
EB

System Outline

Previous automatic transaxle have selected each gear shift using mechanically controlled throttle hydraulic pressure, governor hydraulic pressure and lock–up hydraulic pressure. The electronically controlled transmission, however, controls the line pressure and lock–up pressure etc. electrically, through the solenoid valve. The engine control module controls each solenoid valve based on the input signals from each sensor, which makes smooth driving possible by shift selection for each gear that is most appropriate to the driving conditions at that time.

1. Gear Shift Operation

During driving, the engine control module selects the shift for each gear which is most appropriate to the driving conditions, based on input signals from the engine coolant temp. sensor to TERMINAL THW of the engine control module, and also the input signals to TERMINAL SPD of the engine control module from the vehicle speed sensor devoted to the electronically controlled transmission. Current is then output to the electronically controlled transmission solenoid. When shifting to 1st speed, the current flows from TERMINAL S1 of the engine control module to TERMINAL 3 of the solenoid to GROUND, and from TERMINAL S2 of the engine control module to TERMINAL 6 of the electronically controlled transmission solenoid to GROUND, and continuity to the No.1 and No.2 solenoid causes the shift.

For 2nd speed, the current flows from TERMINAL S1 of the engine control module to TERMINAL 3 of the solenoid to GROUND, and from TERMINAL S2 of the engine control module to TERMINAL 6 of the solenoid to GROUND, and continuity to solenoids No.1 and No.2 causes the shift.

For 3rd speed, there is no continuity to No. 1 solenoid, only to No. 2, causing the shift.

Shifting into 4th speed (Overdrive) takes place when there is no continuity to both No.1 and No.2 solenoid.

2. Stop Light SW Circuit

If the brake pedal is depressed (Stop light SW on) when driving in lock–up condition, a signal is input to TERMINAL STP of the engine control module, the engine control module operates and continuity to the lock–up solenoid is cut.

3. Overdrive Circuit

∗ Overdrive on

When the engine is turned on from ignition off, the engine control module turns the O/D on. When the O/D main SW is pushed while the O/D is off, a signal is input into TERMINAL ODMS of the engine control module, and the O/D is turned on by the engine control module. In this case, the engine control module controls the gear shift according to the vehicle's driving condition, using the O/D range. At this time, the O/D off indicator light is off.

∗ Overdrive off

When the O/D main SW is pushed while the O/D is on, a signal is input into TERMINAL ODMS of the engine control module, and the O/D is turned off. At this time, the current flows through the O/D off indicator light to TERMINAL ODLP of the engine control module. As a result, the O/D off indicator light turns on, and the engine control module controls the gear shift according to the vehicle's driving condition, without using the O/D range.

Service Hints

E3 (A), E4 (B), E5 (C), E6 (D) Engine Control Module

S1, S2–E1 : 9.0–14.0 volts with the ignition SW on and the solenoid on
0–1.5 volts with the ignition SW on and the solenoid off
L–E1 : 7.5–14.0 volts with the ignition SW on and the shift lever at L position
2–E1 : 7.5–14.0 volts with the ignition SW on and the shift lever at 2 position
R–E1 : 7.5–14.0 volts with the ignition SW on and the shift lever at R position
STP–E1 : 9.0–14.0 volts with the brake pedal depressed
THW–E2 : 0.2–1.0 volts with the engine coolant temp. 60˚C (140˚F) –120˚C (248˚F) and engine idling
VTA–E2 : 0.3–0.8 volts with the ignition SW on and the throttle valve fully closed
3.2–4.9 volts with the ignition SW on and the throttle valve fully open
VC–E2 : 4.5–5.5 volts with the ignition SW on
ODMS–E1 : 9.0–14.0 volts with the ignition SW on
0–3.0 volts with the ignition SW on and press continuously the O/D main SW
+B–E1 : 9.0–14.0 volts with the ignition SW on
ODLP–E1 : Approx. 12 volts with the ignition SW on and the O/D main SW turned off

A2 A/T Shift Lever Position SW

3–2 : Closed with the shift lever in R position
3–4 : Closed with the shift lever in 2 position
3–8 : Closed with the shift lever in L position

: Parts Location

Code	See Page	Code		See Page	Code		See Page
A2	32	E3	A	34	J4	A	35
A10	34	E4	B	34	J5	B	35
C9	34	E5	C	34	J7		35
C14	34	E6	D	34	S1		33
D1	34	I10		35	S9		35
E1	32	J2	A	35	T1		33
E2	32	J3	B	35	V1		33

: Relay Blocks

Code	See Page	Relay Blocks (Relay Block Location)
1	22	Engine Room R/B (Engine Compartment Left)

: Junction Block and Wire Harness Connector

Code	See Page	Junction Block and Wire Harness (Connector Location)
IC	25	Engine Room Main Wire and Instrument Panel J/B (Lower Finish Panel)
IG	25	Instrument Panel Wire and Instrument Panel J/B (Lower Finish Panel)
IK	24	
IL		
IM		
1A	22	Engine Wire and Engine Room J/B (Engine Compartment Left)
3A	28	Instrument Panel Wire and RH J/B (Right Side of the Instrument Panel Reinforcement)
3B		
3C		
4B	30	Instrument Panel Wire and Center J/B (Behind the Combination Meter)
4C		

: Connector Joining Wire Harness and Wire Harness

Code	See Page	Joining Wire Harness and Wire Harness (Connector Location)
EA1	38	Engine Wire and Engine Room Main Wire (Inside of the Engine Room R/B)
IA2	40	Engine Room Main Wire and Instrument Panel Wire (Left Side of the Instrument Panel Reinforcement)
IA4		
IA6		
II1	42	Engine Wire and Instrument Panel Wire (Blower Unit RH)
II2		

: Ground Points

Code	See Page	Ground Points Location
EB	38	Left Side of the Cylinder Head
EC		
ED	38	Front Left Suspension Tower
IG	40	Right Kick Panel

: Splice Points

Code	See Page	Wire Harness with Splice Points	Code	See Page	Wire Harness with Splice Points
I2	42	Instrument Panel Wire			

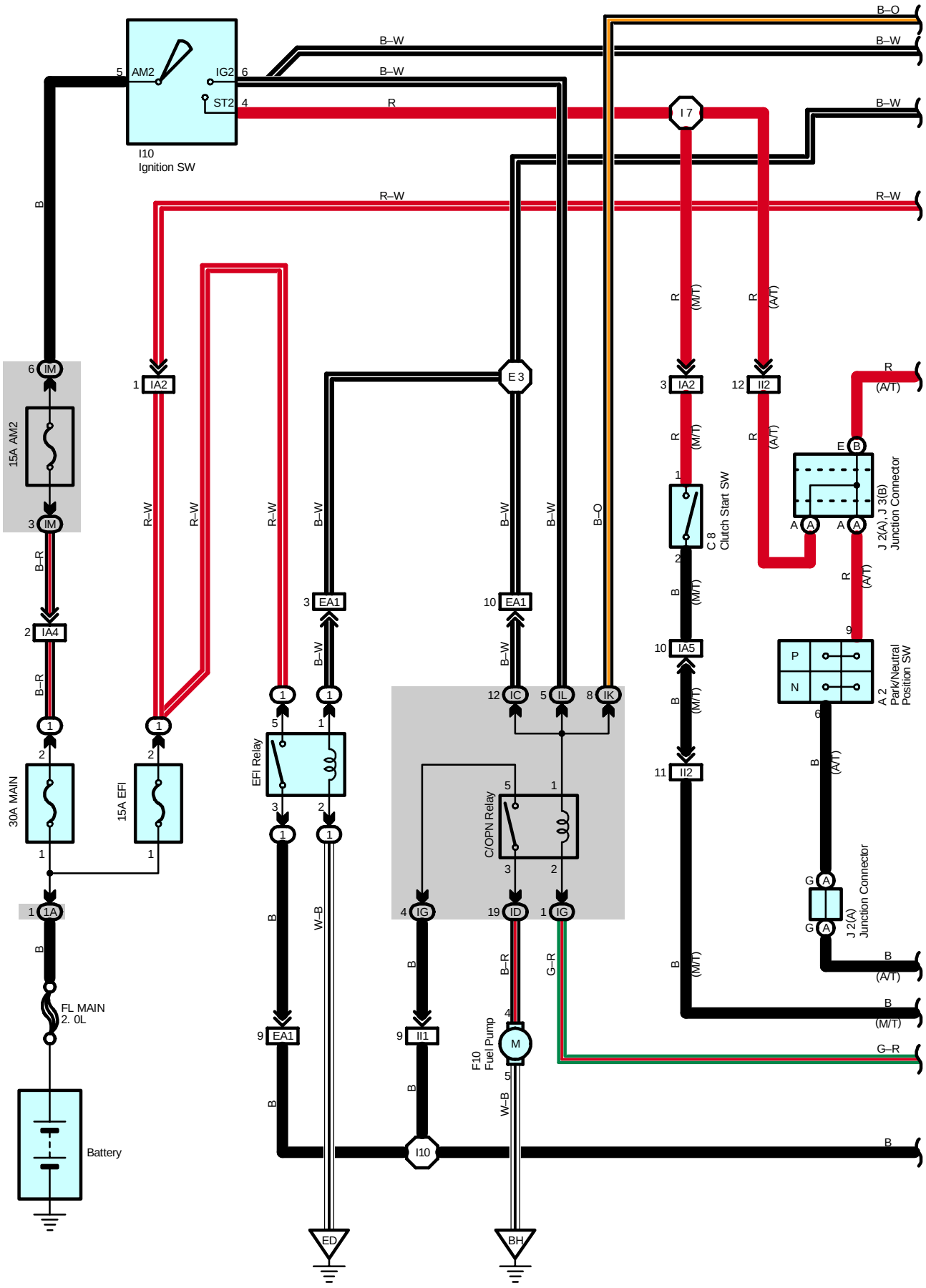
I10
Ignition SW
AM2
IG2
ST2
B–W
R
B–O
R–W
B
15A AM2
30A MAIN
15A EFI
FL MAIN
2. 0L
Battery
EFI Relay
C/OPN Relay
F10
Fuel Pump
I7
C 8
Clutch Start SW
J 2(A), J 3(B)
Junction Connector
A 2
Park/Neutral
Position SW
J 2(A)
Junction Connector
IA2
IA4
IA5
IM
1A
E 3
EA1
IC
IL
IK
IG
ID
II1
II2
I10
ED
BH
M
(M/T)
(A/T)

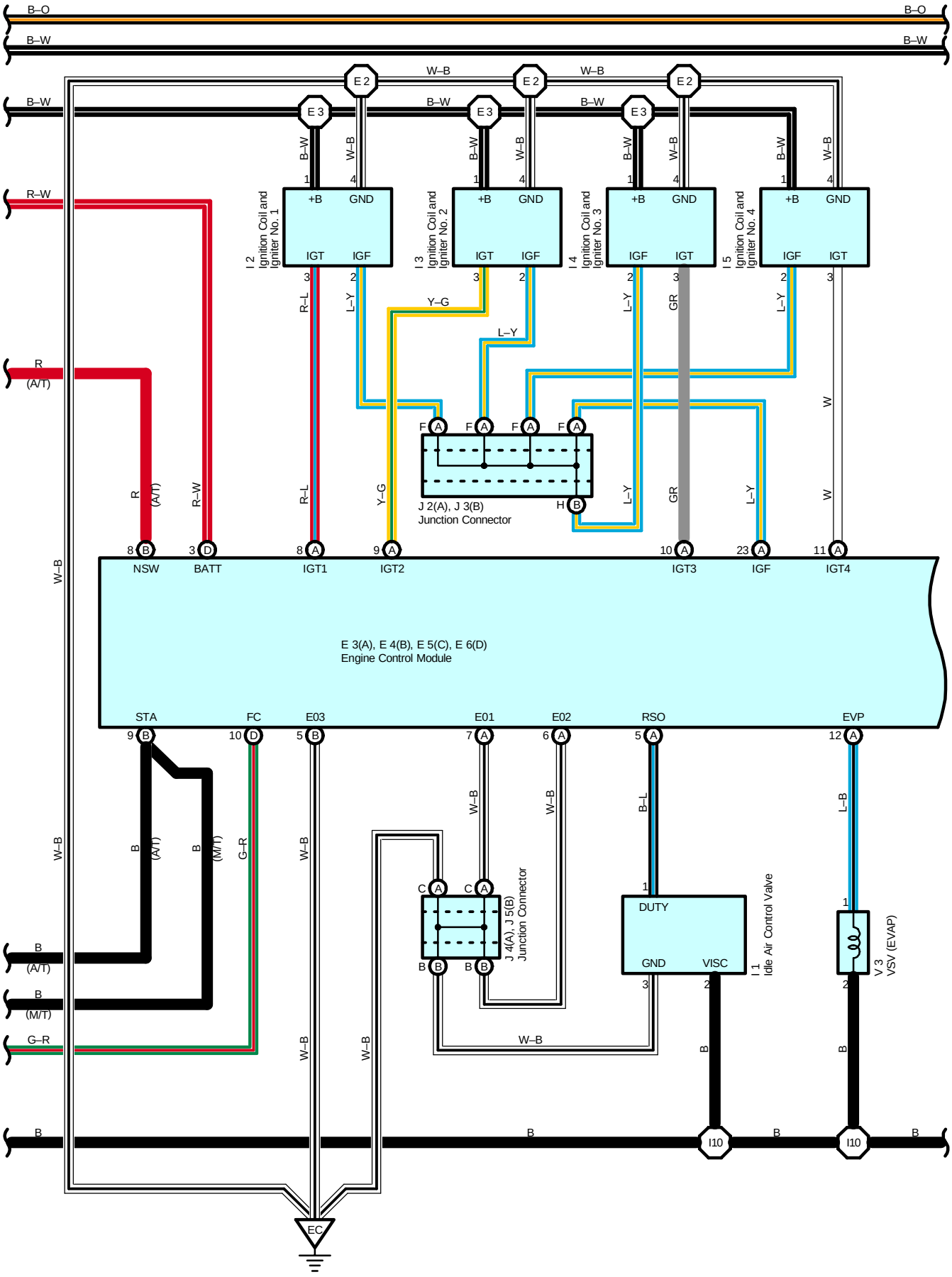
B–O
B–W
E 2
E 3
W–B
B–W
R–W
R
(A/T)
B
(M/T)
G–R
I 2
Ignition Coil and Igniter No. 1
I 3
Ignition Coil and Igniter No. 2
I 4
Ignition Coil and Igniter No. 3
I 5
Ignition Coil and Igniter No. 4
+B
GND
IGT
IGF
R–L
L–Y
Y–G
GR
W
J 2(A), J 3(B)
Junction Connector
NSW
BATT
IGT1
IGT2
IGT3
IGF
IGT4
E 3(A), E 4(B), E 5(C), E 6(D)
Engine Control Module
STA
FC
E03
E01
E02
RSO
EVP
J 4(A), J 5(B)
Junction Connector
DUTY
GND
VISC
I 1
Idle Air Control Valve
B–L
L–B
V 3
VSV (EVAP)
I10
EC

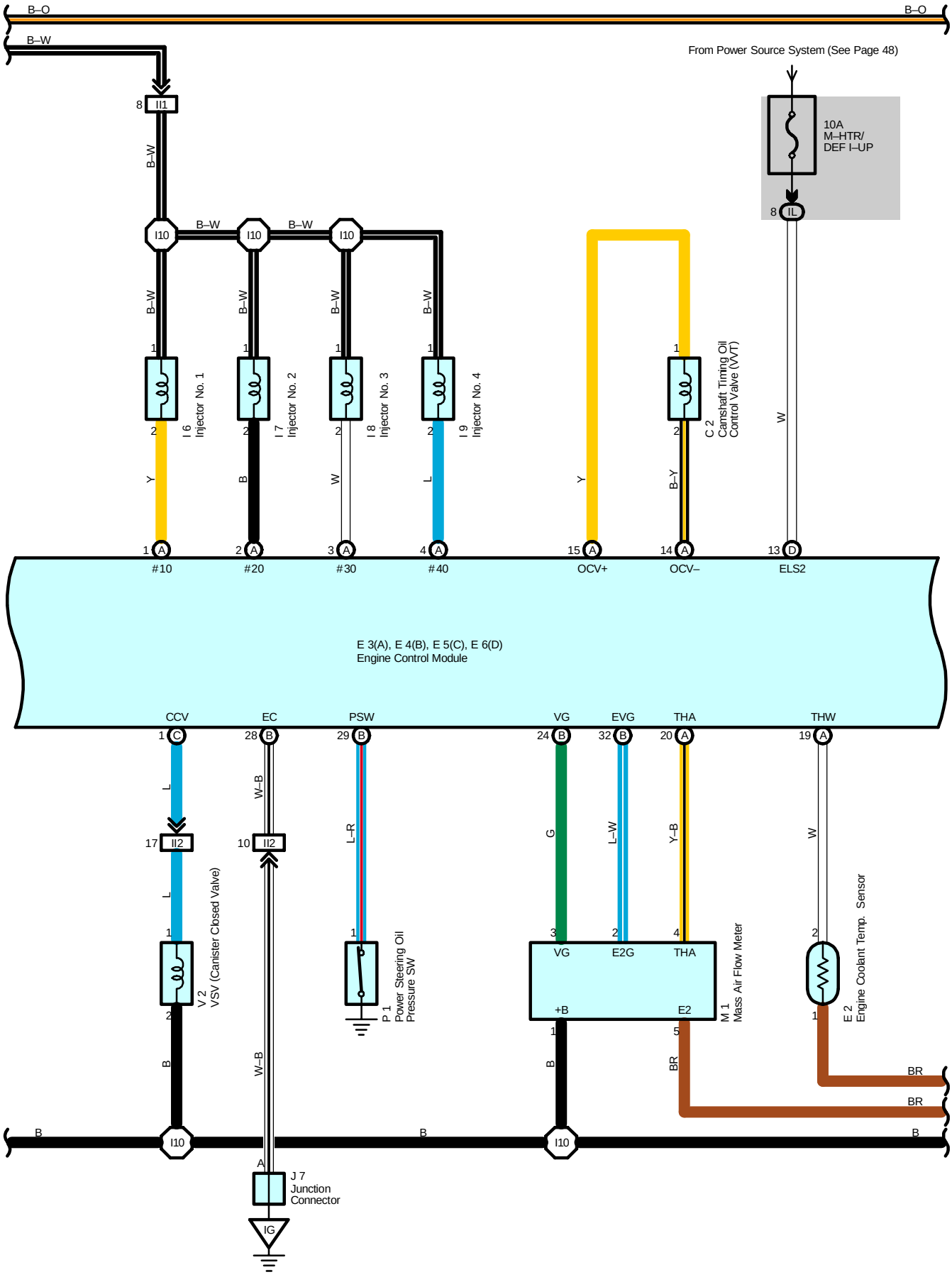
B–O
B–O
B–W
From Power Source System (See Page 48)
8 II1
B–W
10A
M–HTR/
DEF I–UP
8 IL
I10
B–W
I10
B–W
I10
B–W
B–W
B–W
B–W
B–W
1
2
I 6
Injector No. 1
I 7
Injector No. 2
I 8
Injector No. 3
I 9
Injector No. 4
C 2
Camshaft Timing Oil
Control Valve (VVT)
Y
B
W
L
Y
B–Y
W
1 A
#10
2 A
#20
3 A
#30
4 A
#40
15 A
OCV+
14 A
OCV–
13 D
ELS2
E 3(A), E 4(B), E 5(C), E 6(D)
Engine Control Module
CCV
EC
PSW
VG
EVG
THA
THW
1 C
28 B
29 B
24 B
32 B
20 A
19 A
L
W–B
L–R
G
L–W
Y–B
W
17 II2
10 II2
V 2
VSV (Canister Closed Valve)
P 1
Power Steering Oil
Pressure SW
3
2
4
VG
E2G
THA
+B
E2
M 1
Mass Air Flow Meter
E 2
Engine Coolant Temp. Sensor
B
W–B
B
BR
BR
BR
B
B
B
I10
I10
A
J 7
Junction
Connector
IG

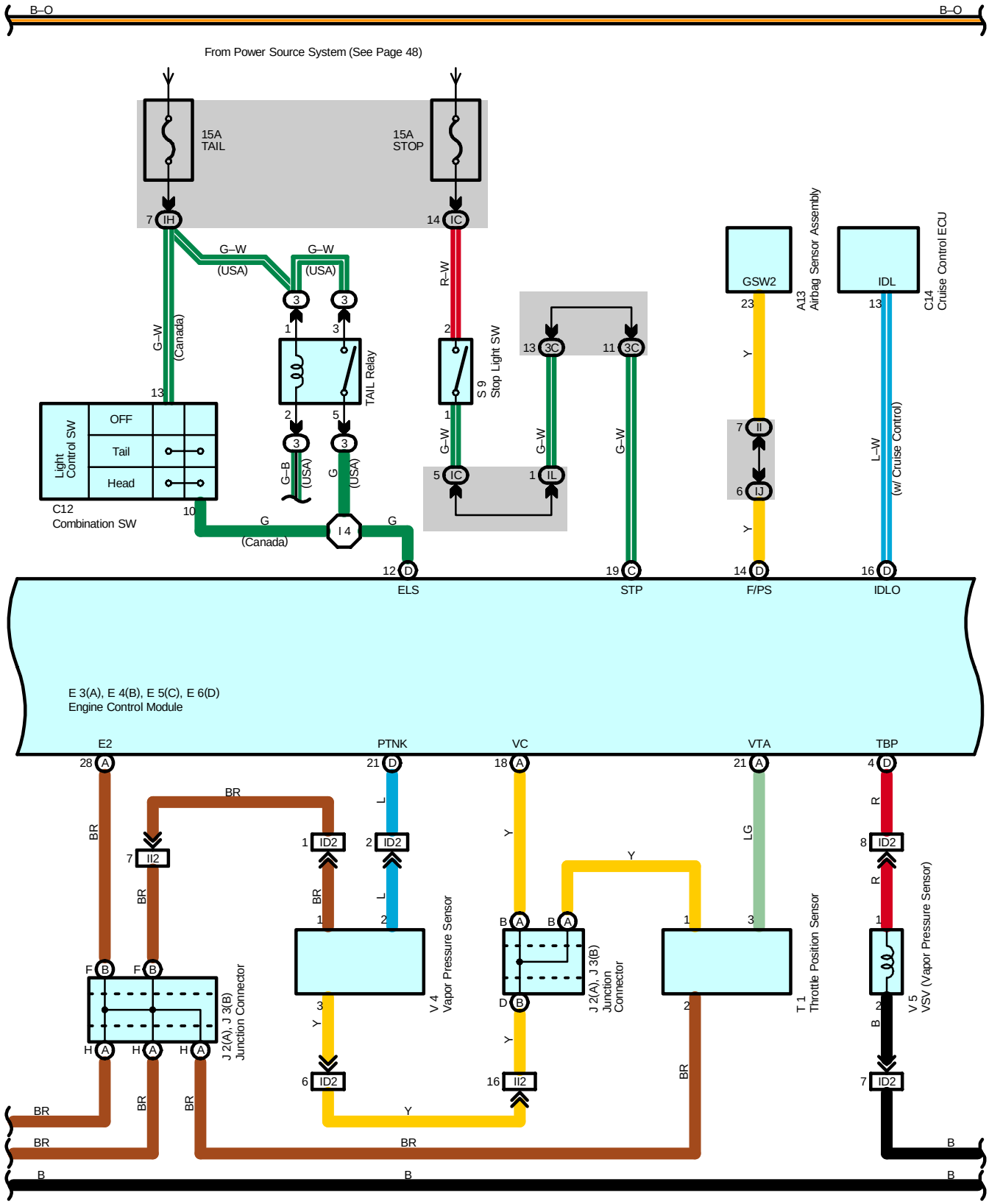
B–O
B–O
From Power Source System (See Page 48)
15A
TAIL
15A
STOP
7 IH
14 IC
G–W
(USA)
G–W
(USA)
G–W
(Canada)
R–W
TAIL Relay
S 9
Stop Light SW
13 3C
11 3C
GSW2
A13
Airbag Sensor Assembly
IDL
C14
Cruise Control ECU
Light Control SW
OFF
Tail
Head
C12
Combination SW
G–B
(USA)
G
(USA)
G–W
G–W
G–W
Y
L–W
(w/ Cruise Control)
I 4
G
(Canada)
G
12 D
ELS
19 C
STP
14 D
F/PS
16 D
IDLO
E 3(A), E 4(B), E 5(C), E 6(D)
Engine Control Module
E2
PTNK
VC
VTA
TBP
BR
L
Y
LG
R
ID2
II2
V 4
Vapor Pressure Sensor
J 2(A), J 3(B)
Junction Connector
T 1
Throttle Position Sensor
V 5
VSV (Vapor Pressure Sensor)
B

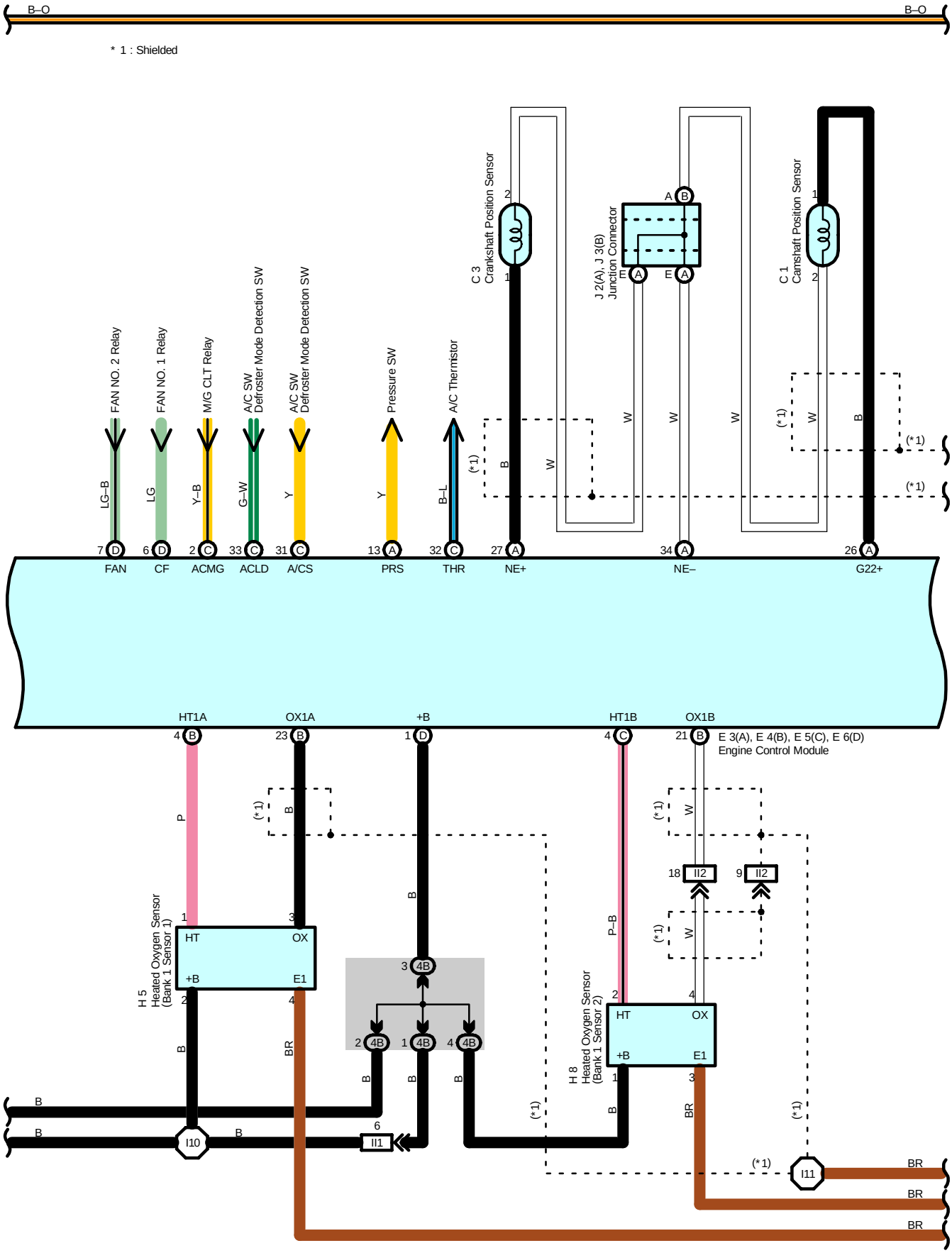
B–O
B–O
* 1 : Shielded
FAN NO. 2 Relay
FAN NO. 1 Relay
M/G CLT Relay
A/C SW Defroster Mode Detection SW
A/C SW Defroster Mode Detection SW
Pressure SW
A/C Thermistor
C 3 Crankshaft Position Sensor
J 2(A), J 3(B) Junction Connector
C 1 Camshaft Position Sensor
LG–B
LG
Y–B
G–W
Y
Y
B–L
FAN
CF
ACMG
ACLD
A/CS
PRS
THR
NE+
NE–
G22+
HT1A
OX1A
+B
HT1B
OX1B
E 3(A), E 4(B), E 5(C), E 6(D)
Engine Control Module
H 5 Heated Oxygen Sensor (Bank 1 Sensor 1)
H 8 Heated Oxygen Sensor (Bank 1 Sensor 2)
HT
OX
+B
E1
I10
II1
II2
I11
BR

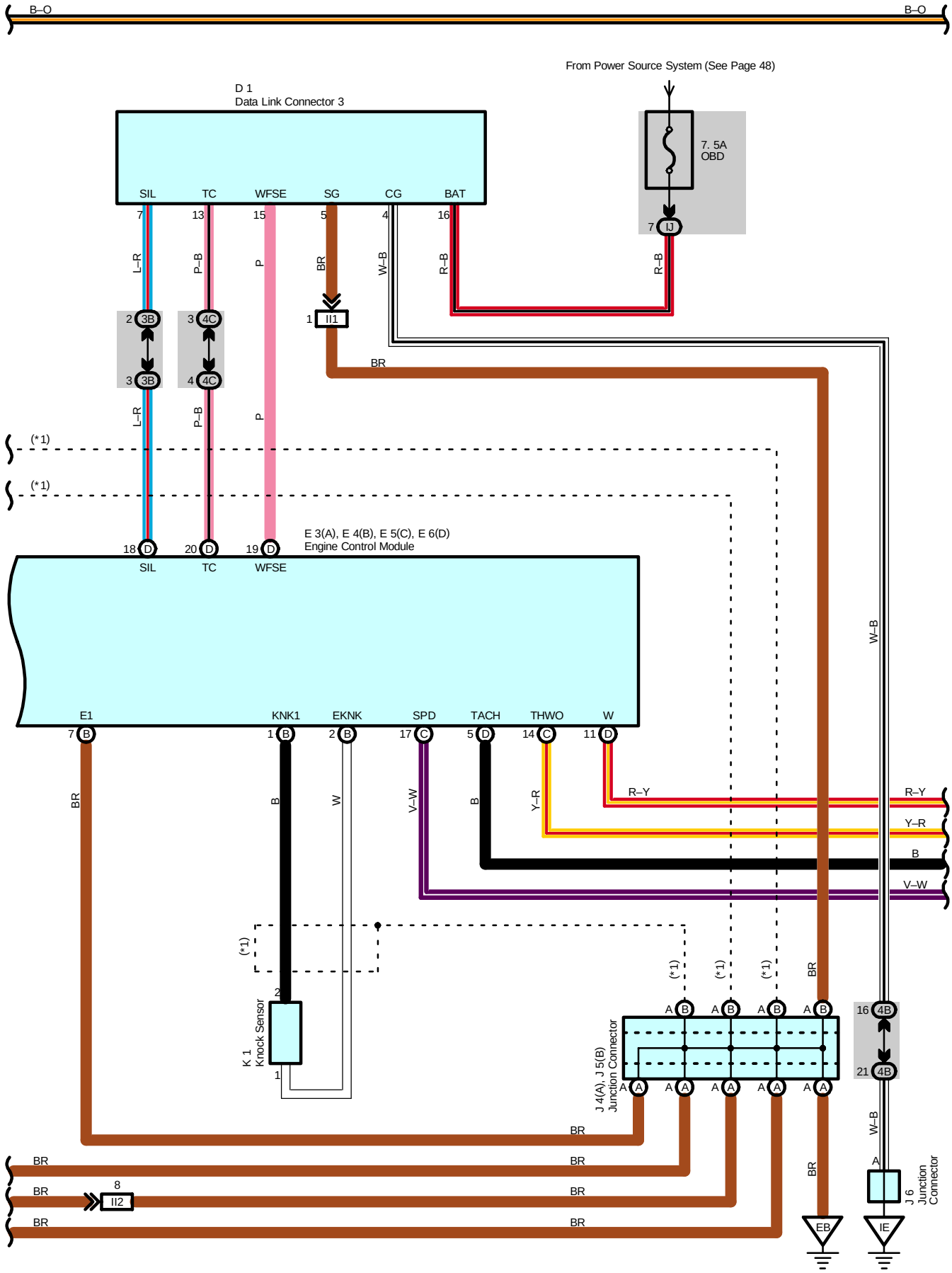
B–O
B–O
From Power Source System (See Page 48)
D 1
Data Link Connector 3
SIL
TC
WFSE
SG
CG
BAT
7. 5A
OBD
7
IJ
L–R
P–B
P
BR
W–B
R–B
2 3B
3 3B
3 4C
4 4C
1 II1
(*1)
(*1)
E 3(A), E 4(B), E 5(C), E 6(D)
Engine Control Module
18 D
20 D
19 D
SIL
TC
WFSE
E1
KNK1
EKNK
SPD
TACH
THWO
W
7 B
1 B
2 B
17 C
5 D
14 C
11 D
BR
B
W
V–W
Y–R
R–Y
K 1
Knock Sensor
J 4(A), J 5(B)
Junction Connector
16 4B
21 4B
J 6
Junction
Connector
8
II2
EB
IE

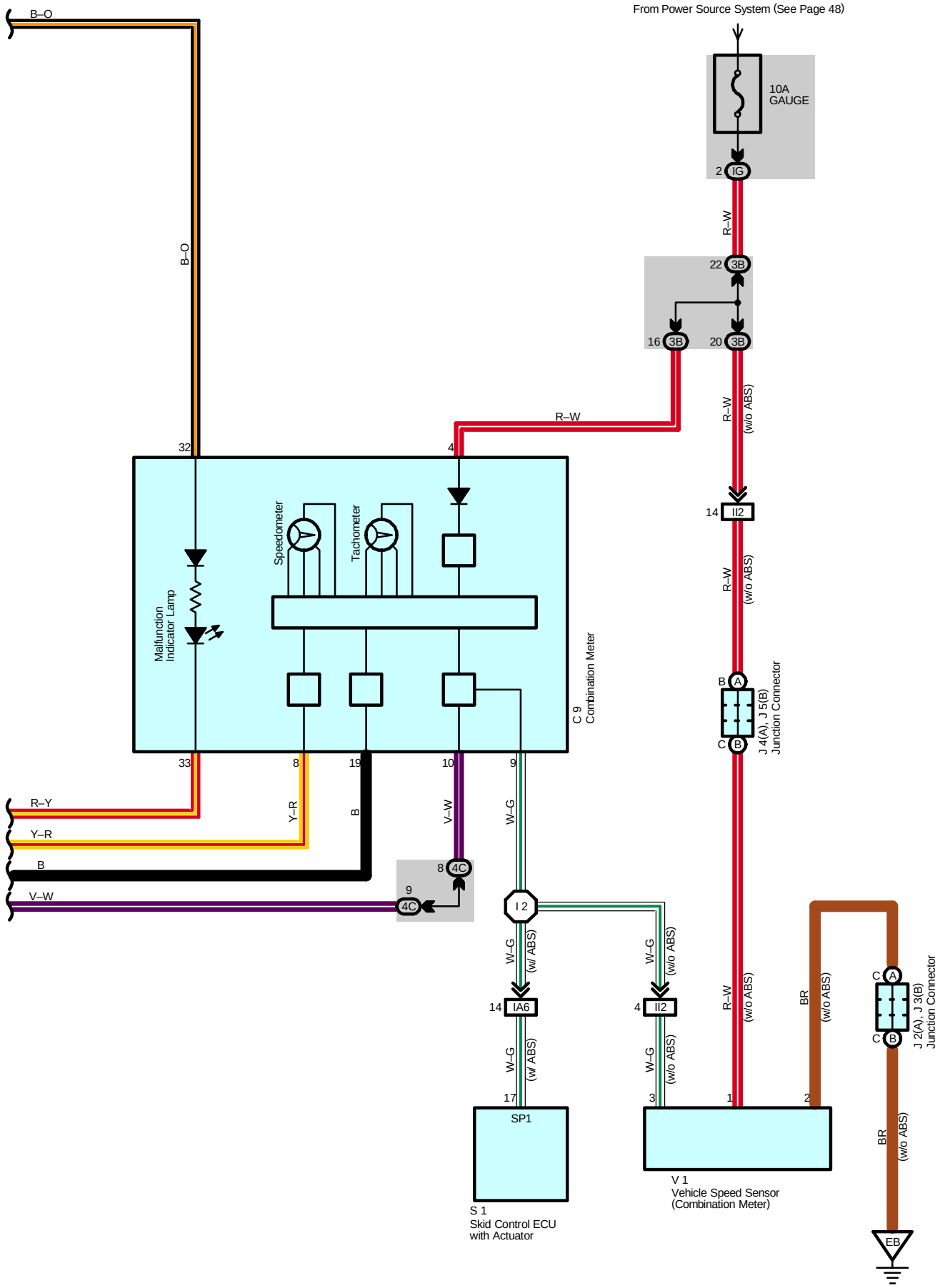
From Power Source System (See Page 48)
10A
GAUGE
2 IG
R–W
22 3B
16 3B
20 3B
R–W (w/o ABS)
R–W
B–O
32
4
14 II2
R–W (w/o ABS)
Malfunction
Indicator Lamp
Speedometer
Tachometer
C 9
Combination Meter
B A
C B
J 4(A), J 5(B)
Junction Connector
33
8
19
10
9
R–Y
Y–R
B
V–W
Y–R
B
V–W
W–G
8 4C
9 4C
I 2
W–G (w/ ABS)
W–G (w/o ABS)
14 IA6
4 II2
W–G (w/ ABS)
W–G (w/o ABS)
17
3
1
2
SP1
S 1
Skid Control ECU
with Actuator
V 1
Vehicle Speed Sensor
(Combination Meter)
R–W (w/o ABS)
BR (w/o ABS)
C A
C B
J 2(A), J 3(B)
Junction Connector
BR (w/o ABS)
EB

System Outline

The engine control system utilizes a microcomputer and maintains overall control of the engine, etc. An outline of engine control is given here.

1. Input Signals

(1) Engine coolant temp. signal system

The engine coolant temp. sensor detects the engine coolant temp. and has a built–in thermistor with a resistance which varies according to the engine coolant temp. Thus the engine coolant temp. is input as a control signal to TERMINAL THW of the engine control module.

(2) Intake air temp. signal system

The intake air temp. sensor is installed in the mass air flow meter and detects the intake air temp., which is input as a control signal to TERMINAL THA of the engine control module.

(3) Power steering oil pressure signal system

Power steering oil pressure is detected by the power steering oil pressure SW and is input as a control signal to TERMINAL PSW of the engine control module.

(4) RPM signal system

Camshaft position and crankshaft position are detected by the camshaft position sensor and crankshaft position sensor. Camshaft position is input as a control signal to TERMINAL G2+ of the engine control module, and engine RPM is input into TERMINAL NE+.

(5) Throttle signal system

The throttle position sensor detects the throttle valve opening angle, which is input as a control signal to TERMINAL VTA of the engine control module.

(6) Vehicle speed signal system

The vehicle speed is detected by the ABS speed sensor and the signal is input to TERMINAL SPD of the engine control module via the comb. meter and the skid control ECU with actuator. (w/ ABS)

The vehicle speed is detected by the vehicle speed sensor installed in the transaxle and the signal is input to TERMINAL SPD of the engine control module via the comb. meter. (w/o ABS)

(7) NSW signal system (A/T)

The Park/Neutral position SW detects whether the shift position is in neutral or not, and inputs a control signal to TERMINAL NSW of the engine control module.

(8) A/C SW signal system

The operating voltage of the A/C SW is detected and is input as a control signal to TERMINAL A/CS of the engine control module.

(9) Battery signal system

Voltage is constantly applied to TERMINAL BATT of the engine control module. When the ignition SW is turned to on, voltage for engine control module operation is applied via the EFI relay to TERMINAL +B of the engine control module.

(10) Intake air volume signal system

Intake air volume is detected by the mass air flow meter, and is input as a control signal to TERMINAL VG of the engine control module.

(11) STA signal system

To confirm that the engine is cranking, the voltage applied to the starter motor during cranking is detected and is input as a control signal to TERMINAL STA of the engine control module.

(12) Oxygen sensor signal system

The oxygen density in the exhaust gases is detected and is input as a control signal into TERMINALS OX1A and OX1B of the engine control module. To maintain stable detection performance by the oxygen sensor, a heater is used for warming the sensor. The heater is also controlled by the engine control module (HT1A and HT1B).

(13) Engine knock signal system

Engine knocking is detected by the knock sensor and input as a control signal to TERMINAL KNK1 of the engine control module.

(14) Electrical load signal system

When systems which cause a high electrical load such as the rear window defogger, taillight are turned on, a signal is input to TERMINALS ELS and ELS2 as a control signal.

(15) Vapor pressure signal system

Vapor pressure is detected by the vapor pressure sensor and is input as a control signal to TERMINAL PTNK of the engine control module.

2. Control System

* SFI system
  The SFI system monitors the engine conditions through the signals, which are input from each sensor to the engine control module. Based on this data and the program memorized in the engine control module, the most appropriate fuel injection timing is decided and current is output to TERMINALS #10, #20, #30 and #40 of the engine control module, operating the injectors (to inject fuel). This is the system which finely controls the fuel injection in response to the driving conditions, through the engine control module.
* ESA system
  The ESA system monitors the engine conditions using the signals, which are input to the engine control module from each sensor. Based on this data and the program memorized in the engine control module, the most appropriate ignition timing is decided and current is output to TERMINALS IGT1, IGT2, IGT3 and IGT4 of the engine control module. This output controls the ignition coil and igniter No. 1 , No. 2 , No. 3 and No. 4 to produce the most appropriate ignition timing for the driving conditions.
* IAC system
  The IAC system increases the RPM and provides idle stability for fast idle–up when the engine is cold, and when the idle speed has dropped due to electrical load and so on. The engine control module evaluates the signals from each sensor, and outputs current to TERMINAL RSO to control the idle air control valve.
* Knock control system
  Knock control system controls the gate based on the engine rotation speed and detects knocking by the peak value of the knock sensor output during the gate open period, and then controls it to the most suitable ignition timing in proportion to the driving condition.
* Evapoparge control system
  This system leads the vapor stuck to the canister to the serge tank in order not to agitate the air fuel by adjusting the fuel injection volume.
  The signal at this time will be output from TERMINAL EVP of the engine control module to VSV (EVAP).

3. Diagnosis System

With the diagnosis system, when there is a malfunctioning in the engine control module signal system,the malfunction system is recorded in the memory. The malfunctioning system can be found by reading the display (Code) of the malfunction indicator lamp.

4. Fail–Safe System

When a malfunction occurs in any system, if there is a possibility of engine trouble being caused by continued control based on the signals from that system, the fail–safe system either controls the system by using the data (Standard values) recorded in the engine control module memory or else stops the engine.

Service Hints

C/OPN Relay

5–3 : Closed with the starter running and the engine running

EFI Relay

5–3 : Closed with the ignition SW at ON or ST position

E2 Engine Coolant Temp. Sensor

1–2 : Approx. 15.04 kΩ (–20˚C, –4˚F)
Approx. 5.74 kΩ (0˚C, 32˚F)
Approx. 2.45 kΩ (20˚C, 68˚F)
Approx. 0.318 kΩ (80˚C, 176˚F)

E3 (A), E4 (B), E5 (C), E6 (D) Engine Control Module

Voltage at engine control module wiring connectors
+B–E1 : 9–14 volts (Ignition SW at ON position)
VC–E1 : 4.5–5.5 volts (Ignition SW at ON position)
VTA–E1 : 0.3–0.8 volts (Ignition SW on and throttle valve fully closed)
: 3.2–4.9 volts (Ignition SW on and throttle valve fully open)
EVG–E1 : 3.3–3.9 volts (Ignition SW at ON position)
THA–E1 : 0.5–3.4 volts (Engine idling and intake air temp. 0–80˚C, 32–176˚F)
THW–E1 : 0.2–1.0 volts (Engine idling and engine coolant temp. 60–120˚C, 140–248˚F)
STA–E1 : 6–14 volts (Engine cranking)
IGT1, IGT2, IGT3, IGT4–E1 : Pulse generation (Engine idling)
IGF–E1 : Pulse generation (Engine idling)
FC–E1 : 9–14 volts (Ignition SW on and engine stopping)
0–3 volts (Engine idling)
W–E1 : 9–14 volts (Engine idling and warning light off)
A/CS–E1 : 9–14 volts (Ignition SW on and A/C SW off)
SPD–E1 : Pulse generation (Driving approx. 20 km/h)
ELS–E1 : 7.5–14 volts (Ignition SW on and taillight on)
ELS2–E1 : 7.5–14 volts (Ignition SW on and rear window defogger on)
NSW–E1 : 0–3 volts (Engine cranking)
#10, #20, #30, #40–E1 : Pulse generation (Engine idling)
NE+ –NE– : Pulse generation (Engine idling)
RSO–E1 : Pulse generation (Engine idling)
G2+ –NE– : Pulse generation (Engine idling)
TBP–E1 : 9.0–14.0 volts (Ignition SW on)
PTNK–E1 : 3.0–3.6 volts (Ignition SW at ON position and remove fuel cap)
OX1A, OX1B–E1 : Pulse generation (Maintain engine speed at 2500 rpm for two minutes after warming up.)
HT1A, HT1B–E1 : 9.0–14.0 volts (Ignition SW at ON position)
0–3.0 volts (Engine idling)
KNK1–E1 : Pulse generation (Engine idling)
EVP–E1 : 9.0–14.0 volts (Ignition SW at ON position)
TACH–E1 : Pulse generation (Engine idling)

: Parts Location

Code	See Page	Code	See Page	Code	See Page
A2	32	F10	36	J4 A	35
A13	34	H5	32	J5 B	35
C1	32	H8	35	J6	35
C2	32	I1	33	J7	35
C3	32	I2	33	K1	33
C8	34	I3	33	M1	33
C9	34	I4	33	P1	33
C12	34	I5	33	S1	33
C14	34	I6	33	S9	35
D1	34	I7	33	T1	33
E2	32	I8	33	V1	33
E3 A	34	I9	33	V2	33
E4 B	34	I10	35	V3	33
E5 C	34	J2 A	35	V4	37
E6 D	34	J3 B	35	V5	37

: Relay Blocks

Code	See Page	Relay Blocks (Relay Block Location)
1	22	Engine Room R/B (Engine Compartment Left)
3	28	RH R/B (Right Side of the Instrument Panel Reinforcement)

: Junction Block and Wire Harness Connector

Code	See Page	Junction Block and Wire Harness (Connector Location)
IC	25	Engine Room Main Wire and Instrument Panel J/B (Lower Finish Panel)
ID	25	Floor Wire and Instrument Panel J/B (Lower Finish Panel)
IG	25	Instrument Panel Wire and Instrument Panel J/B (Lower Finish Panel)
IH		
II		
IJ		
IK	24	
IL		
IM		
1A	22	Engine Wire and Engine Room J/B (Engine Compartment Left)
3B	28	Instrument Panel Wire and RH J/B (Right Side of the Instrument Panel Reinforcement)
3C		
4B	30	Instrument Panel Wire and Center J/B (Behind the Combination Meter)
4C		

: Connector Joining Wire Harness and Wire Harness

Code	See Page	Joining Wire Harness and Wire Harness (Connector Location)
EA1	38	Engine Wire and Engine Room Main Wire (Inside of the Engine Room R/B)
IA2	40	Engine Room Main Wire and Instrument Panel Wire (Left Side of the Instrument Panel Reinforcement)
IA4		
IA5		
IA6		
ID2	42	Instrument Panel Wire and Floor Wire (Left Kick Panel)
II1	42	Engine Wire and Instrument Panel Wire (Blower Unit RH)
II2		



▽ : Ground Points

Code	See Page	Ground Points Location
EB	38	Left Side of the Cylinder Head
EC		
ED	38	Front Left Suspension Tower
IE	40	Behind the Combination Meter
IG	40	Right Kick Panel
BH	44	Under the Left Quarter Pillar



⬡ : Splice Points

Code	See Page	Wire Harness with Splice Points	Code	See Page	Wire Harness with Splice Points
E2	38	Engine Wire	I7	42	Instrument Panel Wire
E3			I10	42	Engine Wire
I2	42	Instrument Panel Wire	I11		
I4					

Fog Light

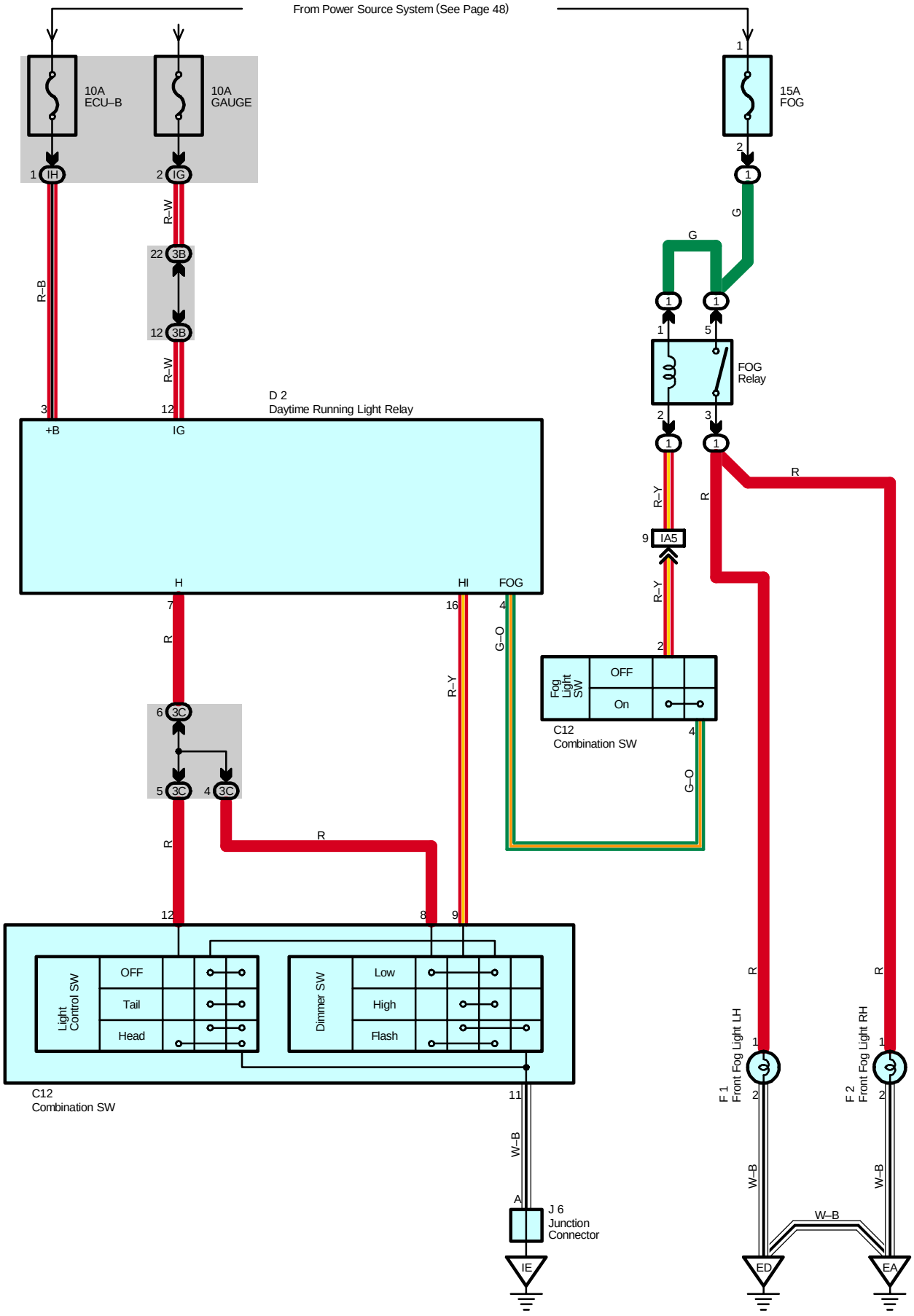
From Power Source System (See Page 48)
10A
ECU–B
10A
GAUGE
15A
FOG
1 IH
2 IG
R–W
22 3B
R–B
12 3B
R–W
D 2
Daytime Running Light Relay
3
+B
12
IG
G
1
5
FOG
Relay
2
3
R–Y
R
9 IA5
R–Y
H
HI
FOG
7
16
4
R
R–Y
G–O
6 3C
Fog
Light
SW
OFF
On
C12
Combination SW
4
G–O
5 3C
4 3C
R
R
12
8
9
Light
Control SW
OFF
Tail
Head
Dimmer SW
Low
High
Flash
C12
Combination SW
11
W–B
A
J 6
Junction
Connector
IE
R
R
F 1
Front Fog Light LH
F 2
Front Fog Light RH
W–B
W–B
W–B
ED
EA

Service Hints

FOG Relay

3–5 : Closed with light control SW at Head position, dimmer SW at Low position and fog light SW at On position

: Parts Location

Code	See Page	Code	See Page	Code	See Page
C12	34	F1	32	J6	35
D2	34	F2	32		

: Relay Blocks

Code	See Page	Relay Blocks (Relay Block Location)
1	22	Engine Room R/B (Engine Compartment Left)

: Junction Block and Wire Harness Connector

Code	See Page	Junction Block and Wire Harness (Connector Location)
IG	25	Instrument Panel Wire and Instrument Panel J/B (Lower Finish Panel)
IH		
3B	28	Instrument Panel Wire and RH J/B (Right Side of the Instrument Panel Reinforcement)
3C		

: Connector Joining Wire Harness and Wire Harness

Code	See Page	Joining Wire Harness and Wire Harness (Connector Location)
IA5	40	Engine Room Main Wire and Instrument Panel Wire (Left Side of the Instrument Panel Reinforcement)

: Ground Points

Code	See Page	Ground Points Location
EA	38	Front Right Fender
ED	38	Front Left Suspension Tower
IE	40	Behind the Combination Meter

E GLOSSARY OF TERMS AND SYMBOLS

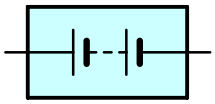

BATTERY
Stores chemical energy and converts it into electrical energy. Provides DC current for the auto's various electrical circuits.

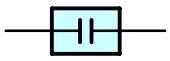

CAPACITOR (Condenser)
A small holding unit for temporary storage of electrical voltage.

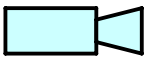

CIGARETTE LIGHTER
An electric resistance heating element.

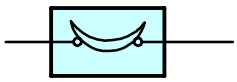

CIRCUIT BREAKER
Basically a reusable fuse, a circuit breaker will heat and open if too much current flows through it. Some units automatically reset when cool, others must be manually reset.



DIODE
A semiconductor which allows current flow in only one direction.



DIODE, ZENER
A diode which allows current flow in one direction but blocks reverse flow only up to a specific voltage. Above that potential, it passes the excess voltage. This acts as a simple voltage regulator.

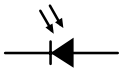

PHOTODIODE
The photodiode is a semiconductor which controls the current flow according to the amount of light.

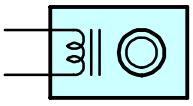

DISTRIBUTOR, IIA
Channels high–voltage current from the ignition coil to the individual spark plugs.

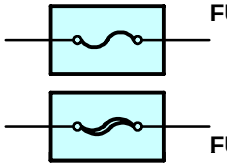

(for Medium Current Fuse)

(for High Current Fuse or Fusible Link)

FUSE
A thin metal strip which burns through when too much current flows through it, thereby stopping current flow and protecting a circuit from damage.

FUSIBLE LINK
A heavy–gauge wire placed in high amperage circuits which burns through on overloads, thereby protecting the circuit. The numbers indicate the crosssection surface area of the wires.



GROUND
The point at which wiring attaches to the Body, thereby providing a return path for an electrical circuit; without a ground, current cannot flow.

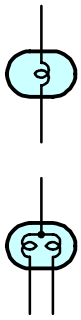

HEADLIGHTS
Current flow causes a headlight filament to heat up and emit light. A headlight may have either a single (1) filament or a double (2) filament

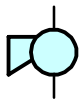

HORN
An electric device which sounds a loud audible signal.

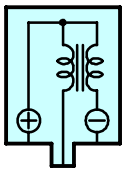

IGNITION COIL
Converts low–voltage DC current into high–voltage ignition current for firing the spark plugs.

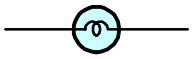

LIGHT
Current flow through a filament causes the filament to heat up and emit light.



LED (LIGHT EMITTING DIODE)
Upon current flow, these diodes emit light without producing the heat of a comparable light.



METER, ANALOG
Current flow activates a magnetic coil which causes a needle to move, thereby providing a relative display against a background calibration.



METER, DIGITAL
Current flow activates one or many LED's, LCD's, or fluorescent displays, which provide a relative or digital display.



MOTOR
A power unit which converts electrical energy into mechanical energy, especially rotary motion.

RELAY

Basically, an electrically operated switch which may be normally closed (1) or open (2). Current flow through a small coil creates a magnetic field which either opens or closes an attached switch.

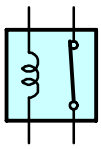

1. NORMALLY CLOSED

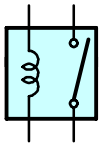

2. NORMALLY OPEN

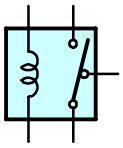

RELAY, DOUBLE THROW

A relay which passes current through one set of contacts or the other.

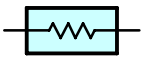

RESISTOR

An electrical component with a fixed resistance, placed in a circuit to reduce voltage to a specific value.

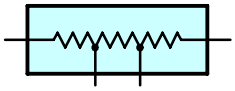

RESISTOR, TAPPED

A resistor which supplies two or more different non adjustable resistance values.



RESISTOR, VARIABLE or RHEOSTAT

A controllable resistor with a variable rate of resistance.
Also called a potentiometer or rheostat.

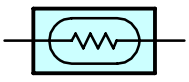

SENSOR (Thermistor)

A resistor which varies its resistance with temperature.

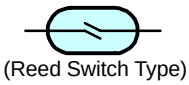

(Reed Switch Type)

SENSOR, SPEED

Uses magnetic impulses to open and close a switch to create a signal for activation of other components.

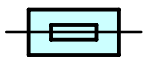

SHORT PIN

Used to provide an unbroken connection within a junction block.

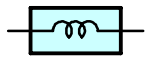

SOLENOID

An electromagnetic coil which forms a magnetic field when current flows, to move a plunger, etc.

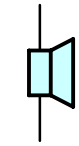

SPEAKER

An electromechanical device which creates sound waves from current flow.

SWITCH, MANUAL

Opens and closes circuits, thereby stopping (1) or allowing (2) current flow.

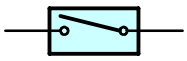

1. NORMALLY OPEN

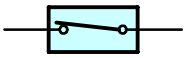

2. NORMALLY CLOSED

SWITCH, DOUBLE THROW

A switch which continuously passes current through one set of contacts or the other.

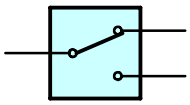

SWITCH, IGNITION

A key operated switch with several positions which allows various circuits, particularly the primary ignition circuit, to become operational.

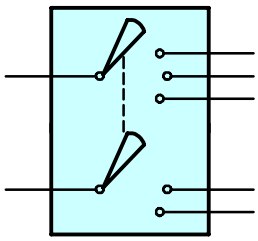

SWITCH, WIPER PARK

Automatically returns wipers to the stop position when the wiper switch is turned off.

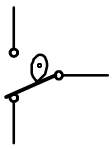

TRANSISTOR

A solidstate device typically used as an electronic relay; stops or passes current depending on the voltage applied at "base".

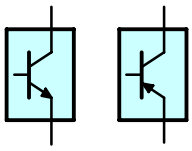

WIRES

Wires are always drawn as straight lines on wiring diagrams.
Crossed wires (1) without a black dot at the junction are not joined;
crossed wires (2) with a black dot or octagonal ( ) mark at the junction are spliced (joined) connections.

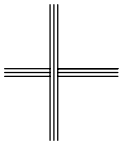

(1) NOT CONNECTED

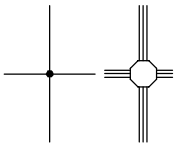

(2) SPLICED

I GROUND POINT

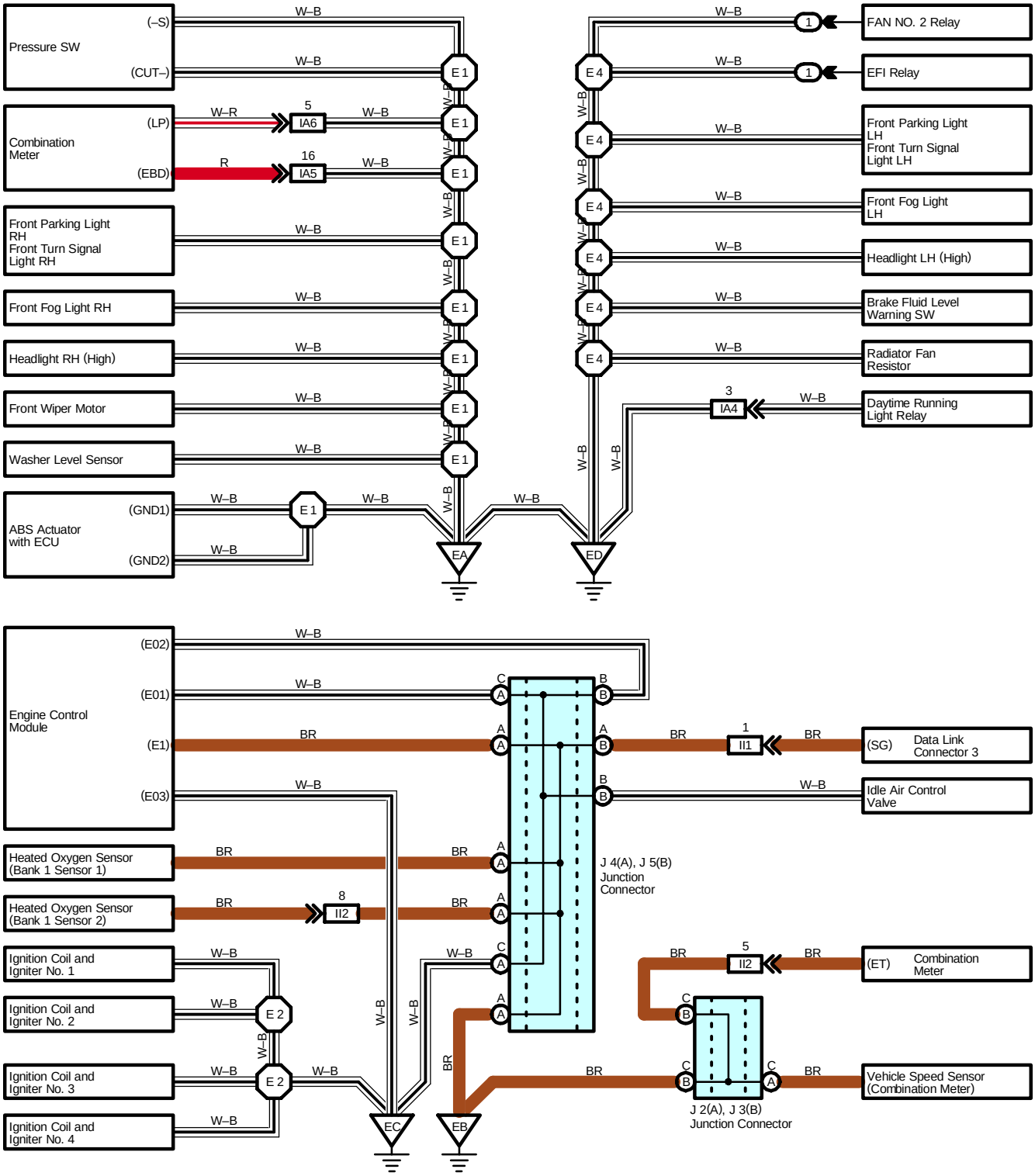

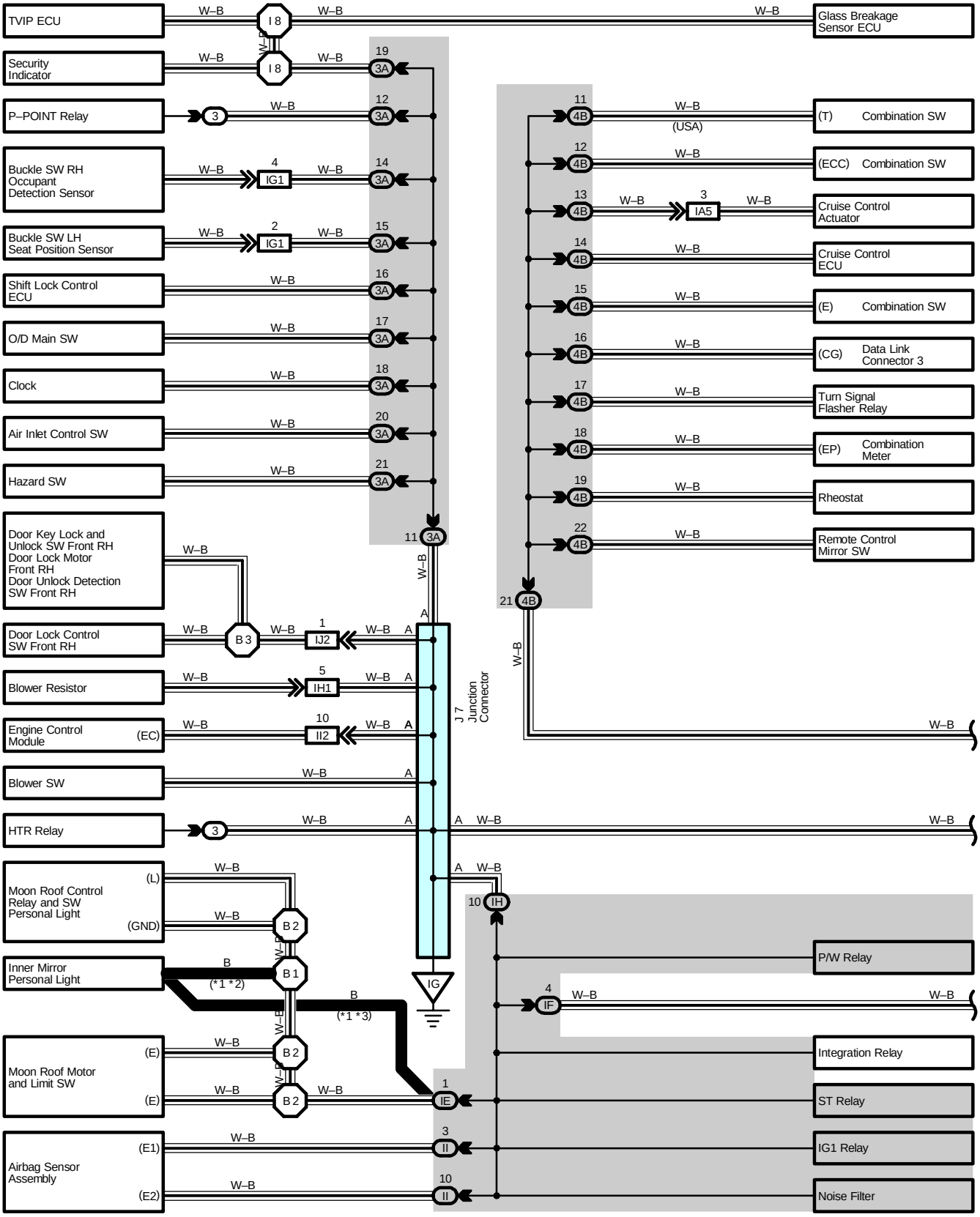

* 1 : w/ Automatic Glare–Resistant EC Mirror
* 2 : w/ Moon Roof
* 3 : w/o Moon Roof

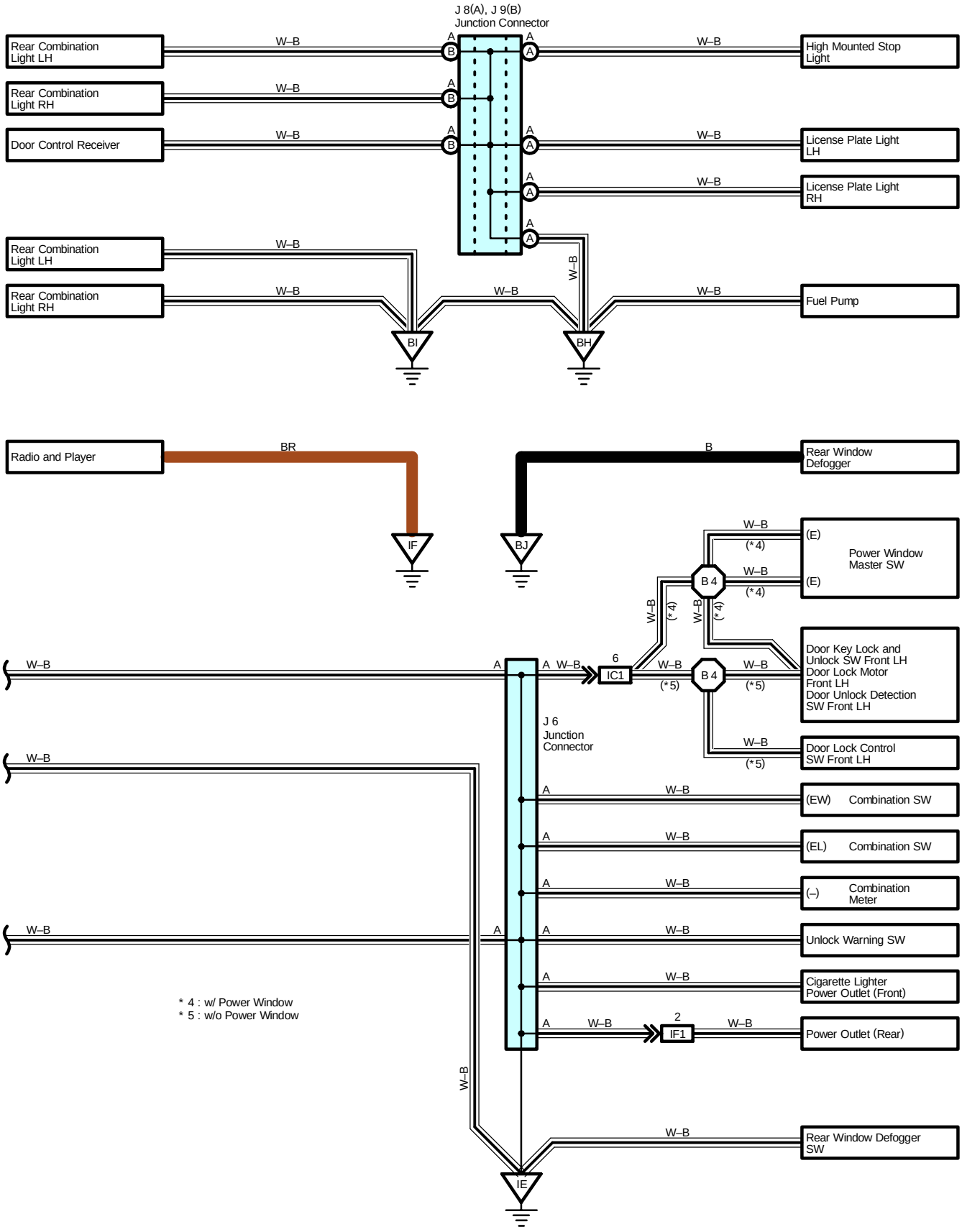
J 8(A), J 9(B)
Junction Connector
Rear Combination Light LH
Rear Combination Light RH
Door Control Receiver
Rear Combination Light LH
Rear Combination Light RH
W–B
High Mounted Stop Light
License Plate Light LH
License Plate Light RH
Fuel Pump
BI
BH
Radio and Player
BR
B
Rear Window Defogger
IF
BJ
(E)
Power Window Master SW
(*4)
B 4
Door Key Lock and Unlock SW Front LH
Door Lock Motor Front LH
Door Unlock Detection SW Front LH
(*5)
Door Lock Control SW Front LH
IC1
6
J 6
Junction Connector
(EW) Combination SW
(EL) Combination SW
(–) Combination Meter
Unlock Warning SW
Cigarette Lighter Power Outlet (Front)
Power Outlet (Rear)
IF1
2
Rear Window Defogger SW
IE
* 4 : w/ Power Window
* 5 : w/o Power Window

: Parts Location

Code		See Page	Code		See Page	Code		See Page
J2	A	35	J5	B	35	J8	A	36
J3	B	35	J6		35	J9	B	36
J4	A	35	J7		35			

: Relay Blocks

Code	See Page	Relay Blocks (Relay Block Location)
1	22	Engine Room R/B (Engine Compartment Left)
3	28	RH R/B (Right Side of the Instrument Panel Reinforcement)

: Junction Block and Wire Harness Connector

Code	See Page	Junction Block and Wire Harness (Connector Location)
IE	25	Roof Wire and Instrument Panel J/B (Lower Finish Panel)
IF	25	Instrument Panel Wire and Instrument Panel J/B (Lower Finish Panel)
IH		
II		
3A	28	Instrument Panel Wire and RH J/B (Right Side of the Instrument Panel Reinforcement)
4B	30	Instrument Panel Wire and Center J/B (Behind the Combination Meter)

: Connector Joining Wire Harness and Wire Harness

Code	See Page	Joining Wire Harness and Wire Harness (Connector Location)
IA4	40	Engine Room Main Wire and Instrument Panel Wire (Left Side of the Instrument Panel Reinforcement)
IA5		
IA6		
IC1	40	Front Door LH Wire and Instrument Panel Wire (Left Kick Panel)
IF1	42	Console Box Wire and Instrument Panel Wire (Under the Instrument Panel Center)
IG1	42	Instrument Panel Wire and Instrument Panel No.3 Wire (Front Side of the Parking Brake Lever)
IH1	42	Instrument Panel Wire and A/C Sub Wire (Left Upper Side of the Blower Unit)
II1	42	Engine Wire and Instrument Panel Wire (Blower Unit RH)
II2		
IJ2	42	Front Door RH Wire and Instrument Panel Wire (Right Kick Panel)

: Ground Points

Code	See Page	Ground Points Location
EA	38	Front Right Fender
EB	38	Left Side of the Cylinder Head
EC		
ED	38	Front Left Suspension Tower
IE	40	Behind the Combination Meter
IF		
IG	40	Right Kick Panel
BH	44	Under the Left Quarter Pillar
BI	44	Lower Back Panel
BJ	44	Under the Right Quarter Pillar

: Splice Points

Code	See Page	Wire Harness with Splice Points	Code	See Page	Wire Harness with Splice Points
E1	38	Engine Room Main Wire	B1	44	Roof Wire
E2	38	Engine Wire	B2		
E4	38	Engine Room Main Wire	B3	44	Front Door RH Wire
I8	42	Instrument Panel Wire	B4	44	Front Door LH Wire

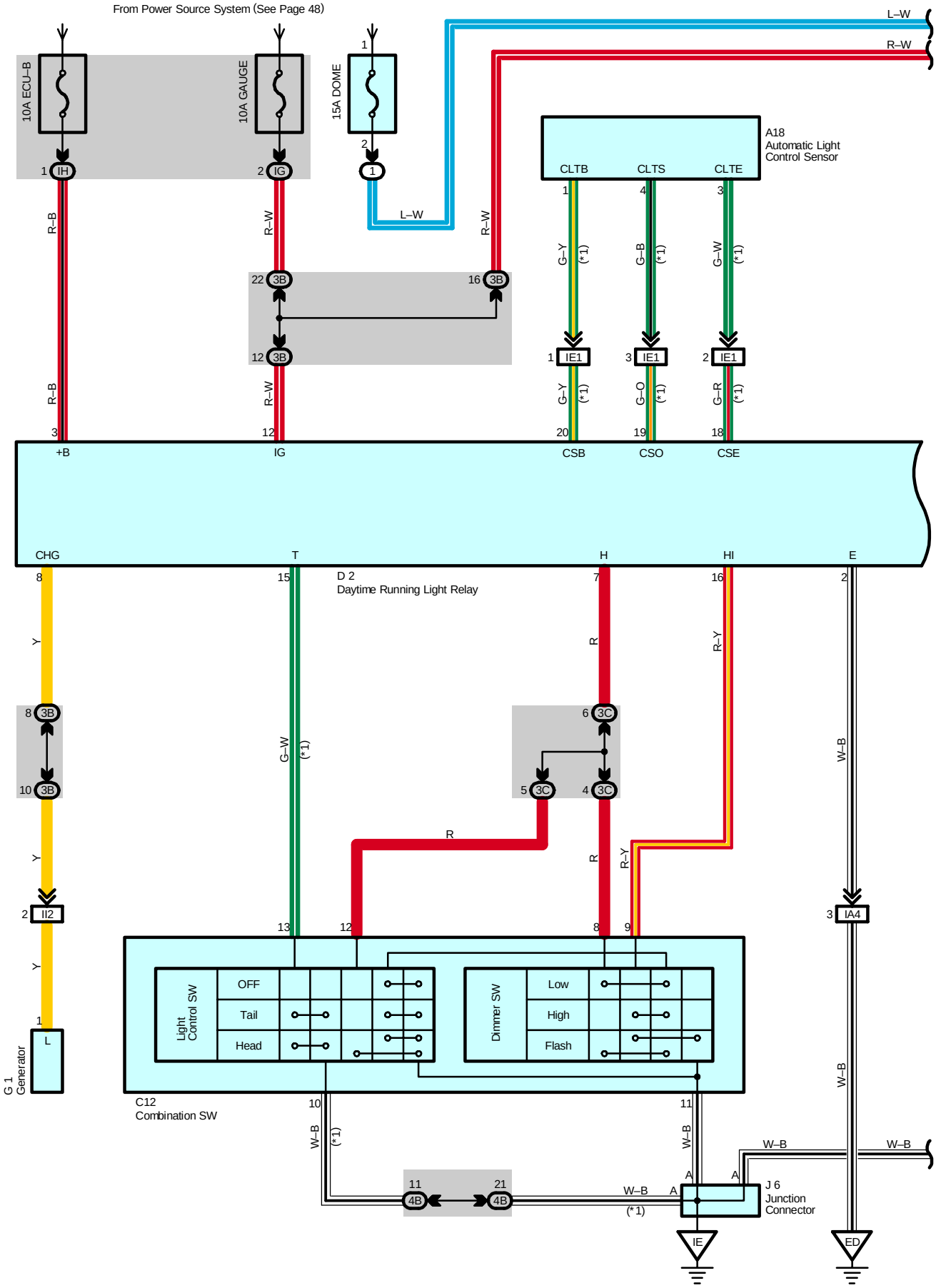
From Power Source System (See Page 48)
10A ECU–B
10A GAUGE
15A DOME
L–W
R–W
A18
Automatic Light
Control Sensor
CLTB
CLTS
CLTE
IH
IG
1
2
R–B
R–W
G–Y
G–B
G–W
(*1)
3B
IE1
G–O
G–R
+B
IG
CSB
CSO
CSE
CHG
T
H
HI
E
D 2
Daytime Running Light Relay
Y
R
R–Y
3C
II2
IA4
G 1
Generator
L
Light
Control SW
OFF
Tail
Head
Dimmer SW
Low
High
Flash
C12
Combination SW
W–B
4B
J 6
Junction
Connector
IE
ED

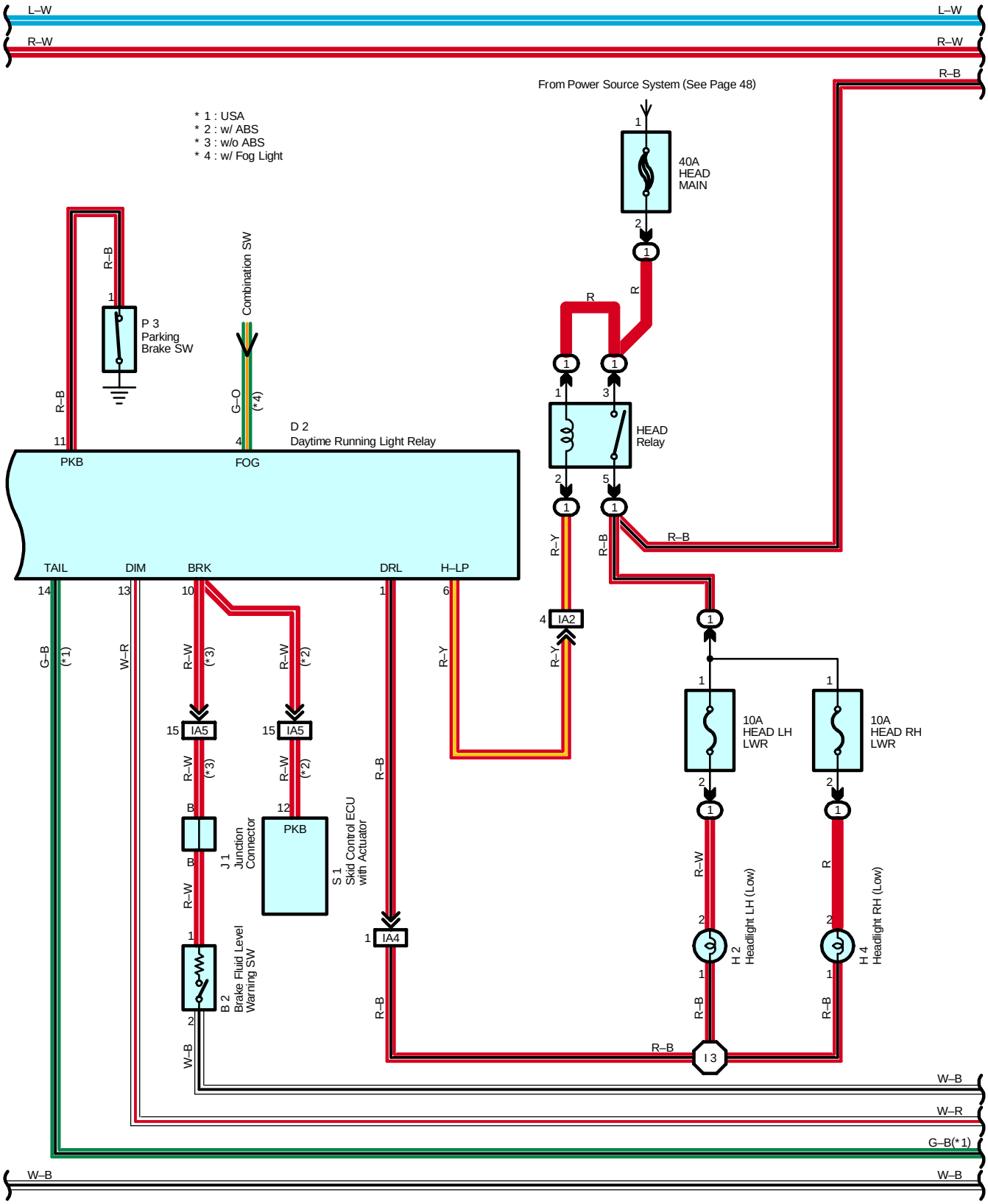
L–W
R–W
L–W
R–W
R–B
From Power Source System (See Page 48)
* 1 : USA
* 2 : w/ ABS
* 3 : w/o ABS
* 4 : w/ Fog Light
40A
HEAD
MAIN
R–B
Combination SW
P 3
Parking
Brake SW
G–O
(*4)
D 2
Daytime Running Light Relay
PKB
FOG
HEAD
Relay
R
R–Y
R–B
TAIL
DIM
BRK
DRL
H–LP
G–B
(*1)
W–R
R–W
(*3)
R–W
(*2)
IA5
IA2
IA4
10A
HEAD LH
LWR
10A
HEAD RH
LWR
J 1
Junction
Connector
S 1
Skid Control ECU
with Actuator
B 2
Brake Fluid Level
Warning SW
H 2
Headlight LH (Low)
H 4
Headlight RH (Low)
I 3
W–B
W–R
G–B(*1)
W–B
W–B

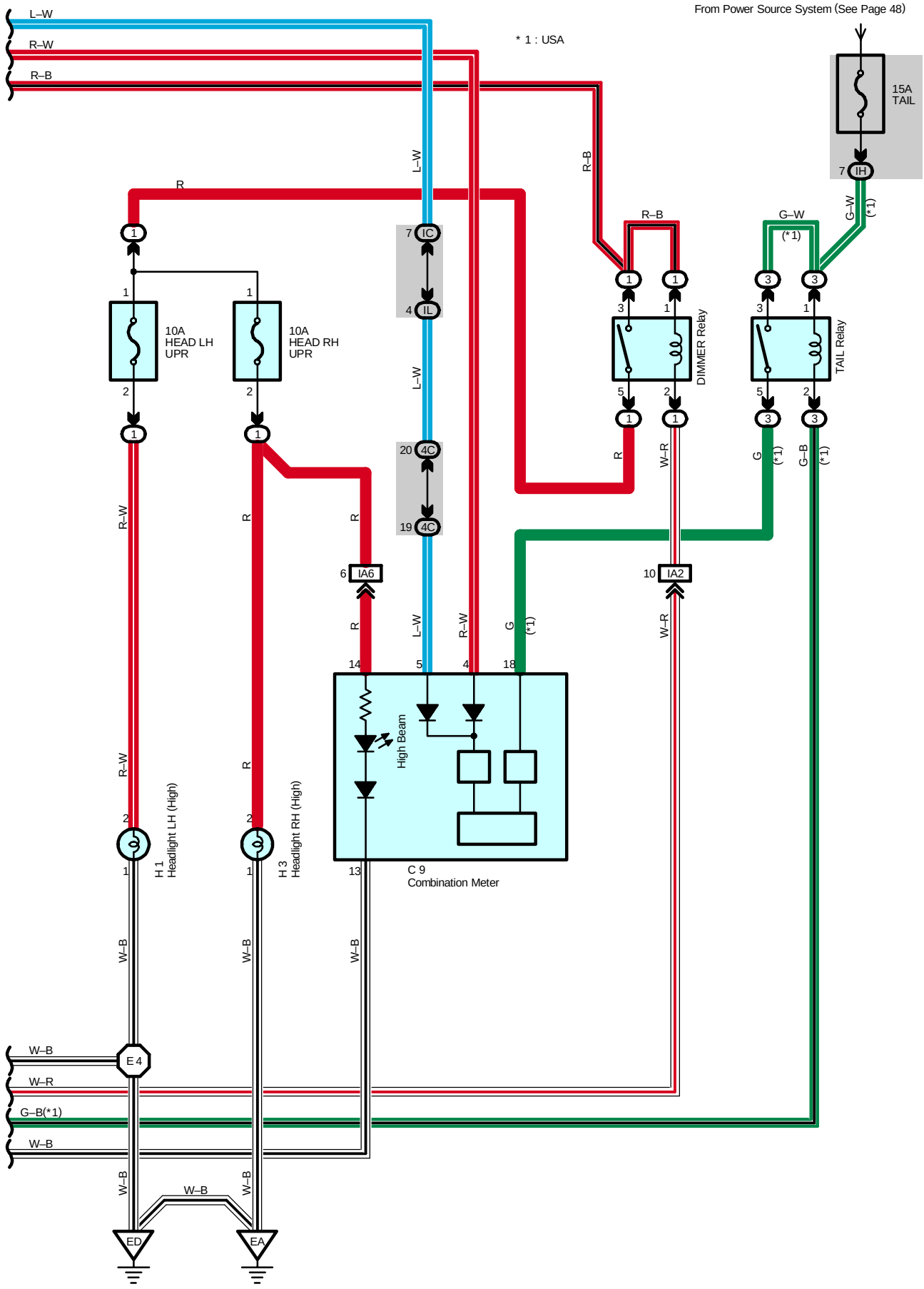
From Power Source System (See Page 48)
* 1 : USA
L–W
R–W
R–B
15A
TAIL
IH
IC
IL
4C
10A
HEAD LH
UPR
10A
HEAD RH
UPR
DIMMER Relay
TAIL Relay
IA6
IA2
High Beam
C 9
Combination Meter
H 1
Headlight LH (High)
H 3
Headlight RH (High)
E 4
ED
EA
W–B
W–R
G–B(*1)
G–W
(*1)

System Outline

The current is always flowing from the HEAD MAIN fuse to HEAD relay (Coil side) to TERMINAL 6 of the daytime running light relay, from ECU–B fuse to TERMINAL 3 of the daytime running light relay and from the TAIL fuse to TAIL relay (Coil side) to TERMINAL 14 of the daytime running light relay (USA).
When the ignition SW is turned on, the current flowing through the GAUGE fuse flows to TERMINAL 12 of the daytime running light relay.

1. Daytime Running Light Operation

When the engine is started, voltage generated at TERMINAL L of the generator is applied to TERMINAL 8 of the daytime running light relay. If the parking brake lever is pulled up (Parking brake SW on) at this time, the relay is not activated so the daytime running light system does not operate. If the parking brake lever is then released (Parking brake SW off), a signal is input to TERMINAL 11 of the relay.
This activates the daytime running light relay and the HEAD relay is turned to on, so the current flows from the HEAD MAIN fuse to the HEAD relay (Point side) to HEAD LH LWR, HEAD RH LWR fuses to TERMINAL 2 of the headlights to TERMINAL 1 to TERMINAL 1 of the daytime running light relay to TERMINAL 2 to GROUND, causing the headlights to light up (Headlights light up dimmer than normal brightness.). Once the daytime running light system operates and the headlights light up, the headlights remain on even if the parking brake lever is pulled up (Parking brake SW on).
If the engine stalls and the ignition SW remains on, the headlights remain light up even through current is no longer output from TERMINAL L of the generator. If the ignition SW is then turned off, the headlights go off.
If the engine is started with the parking brake lever released (Parking brake SW off), the daytime running light system operates and headlights light up when the engine starts.

2. Headlight Operation

When the light control SW is switched to Head position and the dimmer SW is set to Low position, causing the daytime running light relay and the HEAD relay to turn on, so the current flows from the HEAD MAIN fuse to HEAD relay (Coil side) to TERMINAL 6 of the daytime running light relay to TERMINAL 7 to TERMINAL 12 of the light control SW to TERMINAL 11 to GROUND. The current to HEAD relay (Point side) then flows to HEAD LH LWR, HEAD RH LWR fuses to TERMINAL 2 of the headlights (Low) to TERMINAL 1 to TERMINAL 1 of the daytime running light relay to TERMINAL 2 to GROUND, causing the headlights to light up at normal intensity.
When the light control SW is switched to Head position and the dimmer SW is set to High position, the signal from the dimmer SW is input to the daytime running light relay. This activates the daytime running light relay and the HEAD relay is turned on, so the current flows from the HEAD MAIN fuse to HEAD relay (Point side) to TERMINAL 1 of the DIMMER relay to TERMINAL 2 to TERMINAL 13 of the daytime running light relay, activating the DIMMER relay. This causes current to flow from TERMINAL 3 of the DIMMER relay to TERMINAL 5 to HEAD LH UPR, HEAD RH–UPR fuses to TERMINAL 2 of the headlights (High) to TERMINAL 1 to GROUND, causing the headlights to light up at high beam and the high beam indicator light to light up.
When the dimmer SW is switched to Flash position, the signal from the dimmer SW is input to the daytime running light relay. This activates the daytime running light relay and the HEAD relay is turned on, so the current flows from the HEAD MAIN fuse to HEAD relay (Point side) to TERMINAL 1 of the DIMMER relay to TERMINAL 2 to TERMINAL 13 of the daytime running light relay, activating the DIMMER relay, and also flows from the HEAD LH UPR, HEAD RH UPR fuses to TERMINAL 2 of the headlights to TERMINAL 1 to GROUND, causing the headlights to light up at high beam and the high beam indicator light to light up.

3. Automatic Light Control Operation (USA)

When the daytime running light is operating and the Automatic control sensor detects a decrease in the ambient light, the automatic light control operation starts. At the same time, daytime running light relay is activated, so current flows from the TAIL fuse to the TAIL relay (Coil side) to TERMINAL 14 of the daytime running light relay, and the HEAD MAIN fuse to the HEAD relay (Coil side) to TERMINAL 6 of the daytime running light relay, activating both the TAIL relay and the HEAD relay, so that the taillights and headlights light up.
When the automatic light control sensor detects an increase in the ambient light, the ignition SW is turned to off, the light control SW is turned to Head position, and the automatic light control operation stops.

Headlight

Service Hints

HEAD Relay

1–2 : Closed with the light control SW at Head position or the dimmer SW at Flash position
Closed with the engine running and the parking brake lever is released (Parking brake SW off)

D2 Daytime Running Light Relay

12–Ground : Approx. 12 volts with the ignition SW at ON position
7–Ground : Approx. 12 volts with the light control SW at Head position or the dimmer SW at Flash position
3, 6, 14–Ground : Always approx. 12 volts
11–Ground : Continuity with the parking brake lever pulled up
8–Ground : 13.2–14.0 volts with the engine running at 5000 rpm and 115˚C (239˚F)
2–Ground : Always continuity
16–Ground : Continuity with the dimmer SW at High or Flash position
10–Ground : Continuity with the brake fluid level not enough or the parking brake lever pulled up

○ : Parts Location

Code	See Page	Code	See Page	Code	See Page
A18	34	G1	32	J1	33
B2	32	H1	32	J6	35
C9	34	H2	32	P3	35
C12	34	H3	32	S1	33
D2	34	H4	32		

▭ : Relay Blocks

Code	See Page	Relay Blocks (Relay Block Location)
1	22	Engine Room R/B (Engine Compartment Left)
3	28	RH R/B (Right Side of the Instrument Panel Reinforcement)

▭ : Junction Block and Wire Harness Connector

Code	See Page	Junction Block and Wire Harness (Connector Location)
IC	25	Engine Room Main Wire and Instrument Panel J/B (Lower Finish Panel)
IG	25	Instrument Panel Wire and Instrument Panel J/B (Lower Finish Panel)
IH		
IL	24	
3B	28	Instrument Panel Wire and RH J/B (Right Side of the Instrument Panel Reinforcement)
3C		
4B	30	Instrument Panel Wire and Center J/B (Behind the Combination Meter)
4C		

▭ : Connector Joining Wire Harness and Wire Harness

Code	See Page	Joining Wire Harness and Wire Harness (Connector Location)
IA2	40	Engine Room Main Wire and Instrument Panel Wire (Left Side of the Instrument Panel Reinforcement)
IA4		
IA5		
IA6		
IE1	42	Instrument Panel Wire and Instrument Panel No.4 Wire (Behind the Combination Meter)
II2	42	Engine Wire and Instrument Panel Wire (Blower Unit RH)

▽ : Ground Points

Code	See Page	Ground Points Location
EA	38	Front Right Fender
ED	38	Front Left Suspension Tower
IE	40	Behind the Combination Meter

 **: Splice Points**

Code	See Page	Wire Harness with Splice Points	Code	See Page	Wire Harness with Splice Points
E4	38	Engine Room Main Wire	I3	42	Engine Room Main Wire

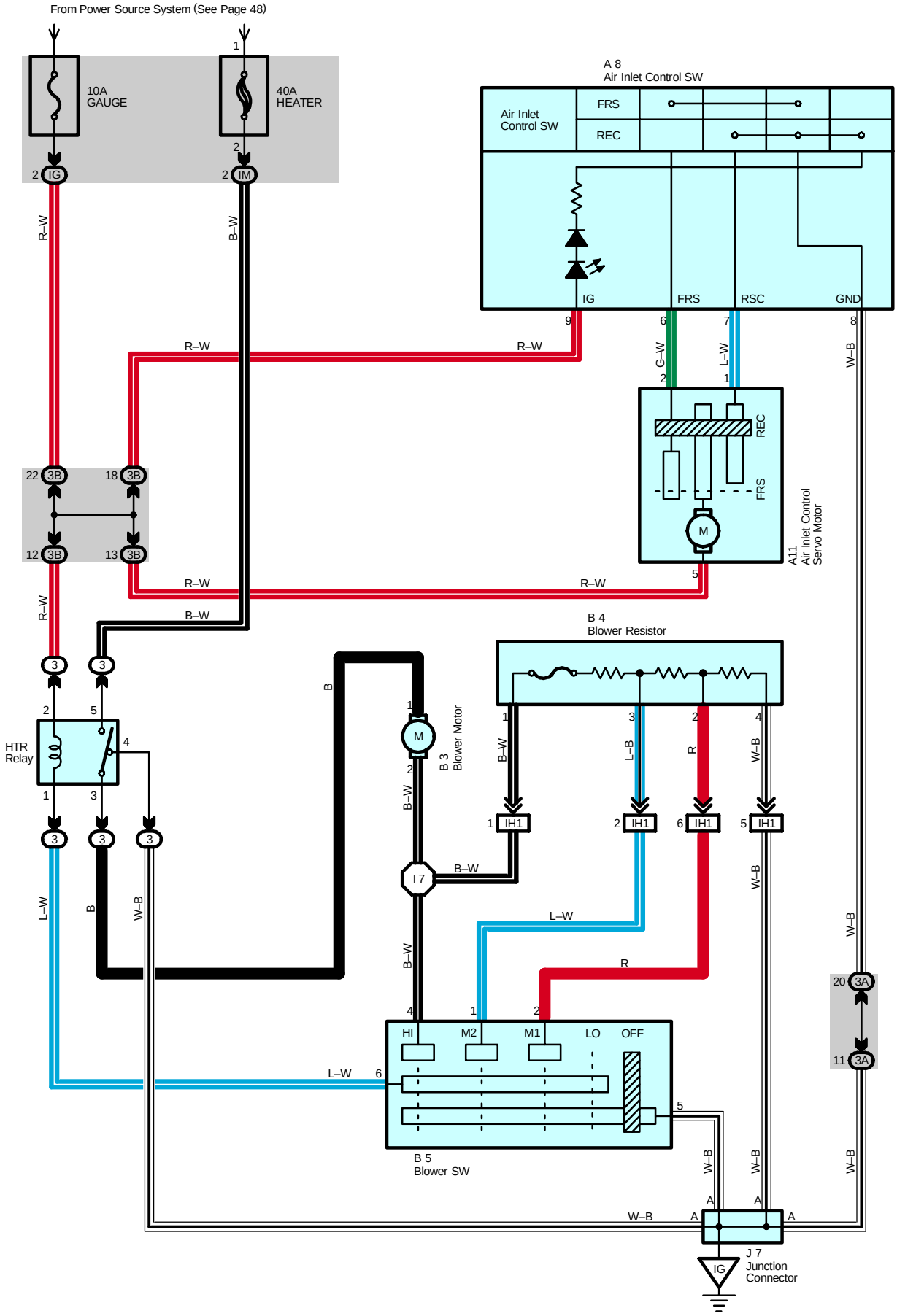
From Power Source System (See Page 48)
10A
GAUGE
40A
HEATER
IG
IM
A 8
Air Inlet Control SW
Air Inlet
Control SW
FRS
REC
IG
FRS
RSC
GND
R–W
B–W
G–W
L–W
W–B
REC
FRS
M
A11
Air Inlet Control
Servo Motor
3B
HTR
Relay
B 4
Blower Resistor
B 3
Blower Motor
IH1
I 7
L–W
B
W–B
R
HI
M2
M1
LO
OFF
B 5
Blower SW
3A
J 7
Junction
Connector

Service Hints

HTR Relay

5–3 : Closed with the ignition SW at ON position and the blower SW on

: Parts Location

Code	See Page	Code	See Page	Code	See Page
A8	34	B3	34	B5	34
A11	34	B4	34	J7	35

: Relay Blocks

Code	See Page	Relay Blocks (Relay Block Location)
3	28	RH R/B (Right Side of the Instrument Panel Reinforcement)

: Junction Block and Wire Harness Connector

Code	See Page	Junction Block and Wire Harness (Connector Location)
IG	25	Instrument Panel Wire and Instrument Panel J/B (Lower Finish Panel)
IM	24	
3A	28	Instrument Panel Wire and RH J/B (Right Side of the Instrument Panel Reinforcement)
3B		

: Connector Joining Wire Harness and Wire Harness

Code	See Page	Joining Wire Harness and Wire Harness (Connector Location)
IH1	42	Instrument Panel Wire and A/C Sub Wire (Left Upper Side of the Blower Unit)

: Ground Points

Code	See Page	Ground Points Location
IG	40	Right Kick Panel

: Splice Points

Code	See Page	Wire Harness with Splice Points	Code	See Page	Wire Harness with Splice Points
I7	42	Instrument Panel Wire			

Horn

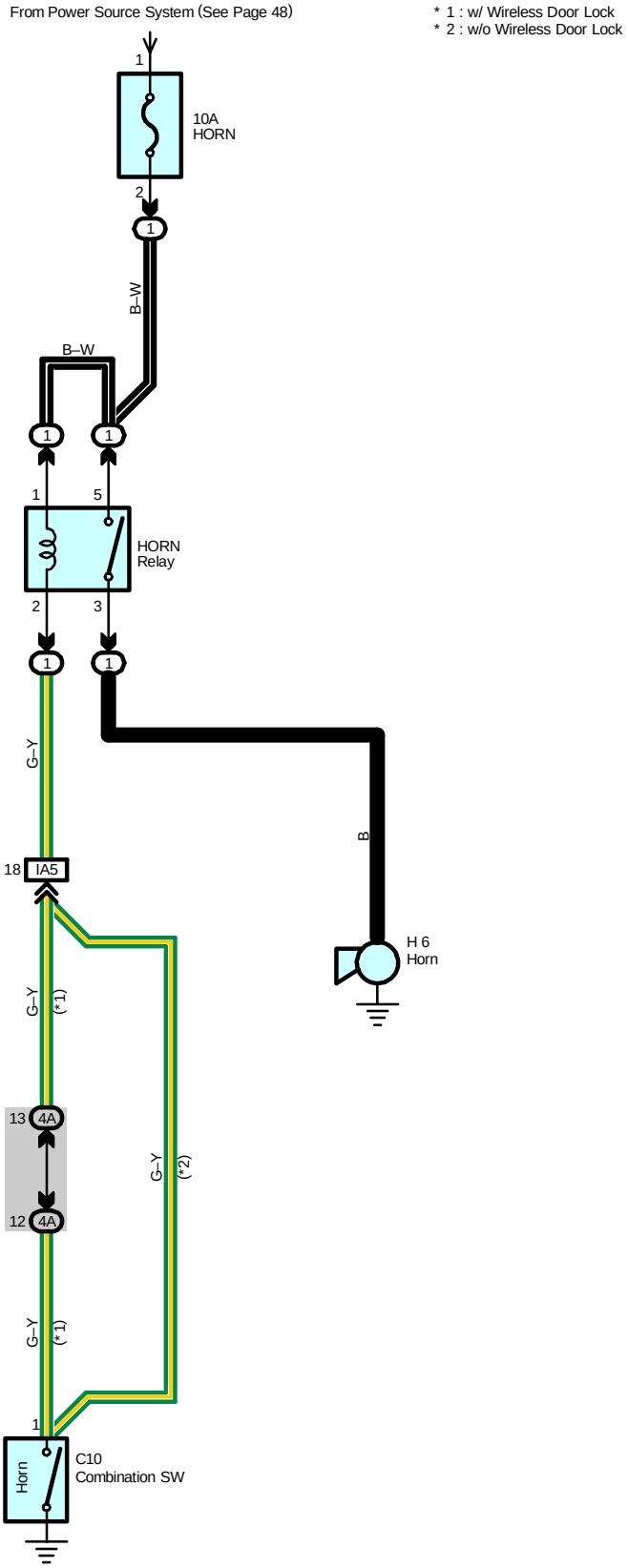
From Power Source System (See Page 48)
* 1 : w/ Wireless Door Lock
* 2 : w/o Wireless Door Lock
1
10A
HORN
2
1
B–W
B–W
1
1
1
5
HORN
Relay
2
3
1
1
G–Y
B
18
IA5
H 6
Horn
G–Y
(*1)
13
4A
12
4A
G–Y
(*2)
G–Y
(*1)
1
Horn
C10
Combination SW

Service Hints

HORN Relay

5–3 : Closed with the horn SW on.

: Parts Location

Code	See Page	Code	See Page	Code	See Page
C10	34	H6	32		

: Relay Blocks

Code	See Page	Relay Blocks (Relay Block Location)
1	22	Engine Room R/B (Engine Compartment Left)

: Junction Block and Wire Harness Connector

Code	See Page	Junction Block and Wire Harness (Connector Location)
4A	30	Instrument Panel Wire and Center J/B (Behind the Combination Meter)

: Connector Joining Wire Harness and Wire Harness

Code	See Page	Joining Wire Harness and Wire Harness (Connector Location)
IA5	40	Engine Room Main Wire and Instrument Panel Wire (Left Side of the Instrument Panel Reinforcement)

This manual provides information on the electrical circuits installed on vehicles by dividing them into a circuit for each system.

The actual wiring of each system circuit is shown from the point where the power source is received from the battery as far as each ground point. (All circuit diagrams are shown with the switches in the OFF position.)

When troubleshooting any problem, first understand the operation of the circuit where the problem was detected (see System Circuit section), the power source supplying power to that circuit (see Power Source section), and the ground points (see Ground Point section). See the System Outline to understand the circuit operation.

When the circuit operation is understood, begin troubleshooting of the problem circuit to isolate the cause. Use Relay Location and Electrical Wiring Routing sections to find each part, junction block and wiring harness connectors, wiring harness and wiring harness connectors, splice points, and ground points of each system circuit. Internal wiring for each junction block is also provided for better understanding of connection within a junction block.
Wiring related to each system is indicated in each system circuit by arrows (from__, to__). When overall connections are required, see the Overall Electrical Wiring Diagram at the end of this manual.

[A]

Stop Light

* The system shown here is an EXAMPLE ONLY. It is different to the actual circuit shown in the SYSTEM CIRCUITS SECTION.

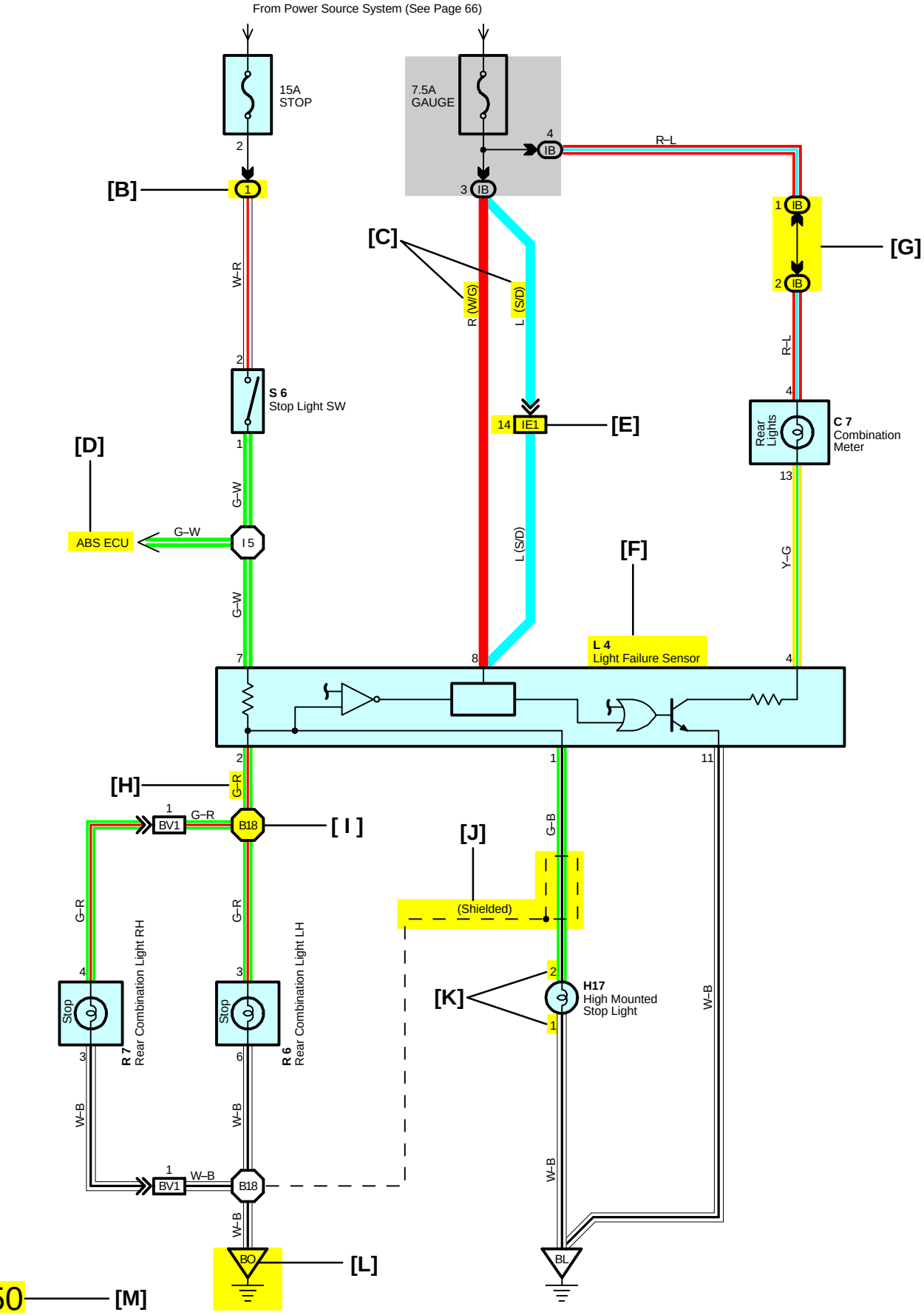

[A] : System Title

[B] : Indicates a Relay Block. No shading is used and only the Relay Block No. is shown to distinguish it from the J/B

Example: (1) Indicates Relay Block No.1

[C] : ( ) is used to indicate different wiring and connector, etc. when the vehicle model, engine type, or specification is different.

[D] : Indicates related system.

[E] : Indicates the wiring harness and wiring harness connector. The wiring harness with male terminal is shown with arrows (»).
Outside numerals are pin numbers.

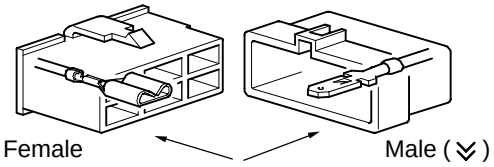

The first letter of the code for each wiring harness and wiring harness connector(s) indicates the component's location, e.g, "E" for the Engine Compartment, "I" for the Instrument Panel and Surrounding area, and "B" for the Body and Surrounding area.

When more than one code has the first and second letters in common, followed by numbers (e.g, IH1, IH2), this indicates the same type of wiring harness and wiring harness connector.

[F] : Represents a part (all parts are shown in sky blue). The code is the same as the code used in parts position.

[G] : Junction Block (The number in the circle is the J/B No. and the connector code is shown beside it). Junction Blocks are shaded to clearly separate them from other parts.

Example:

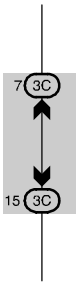

3C indicates that it is inside Junction Block No.3

[H] : Indicates the wiring color.

Wire colors are indicated by an alphabetical code.

B	= Black	W	= White	BR	= Brown
L	= Blue	V	= Violet	SB	= Sky Blue
R	= Red	G	= Green	LG	= Light Green
P	= Pink	Y	= Yellow	GR	= Gray
O	= Orange				

The first letter indicates the basic wire color and the second letter indicates the color of the stripe.

Example: L – Y

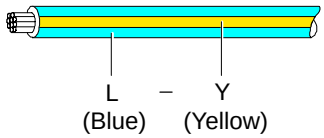

[I] : Indicates a wiring Splice Point (Codes are "E" for the Engine Room, "I" for the Instrument Panel, and "B" for the Body).

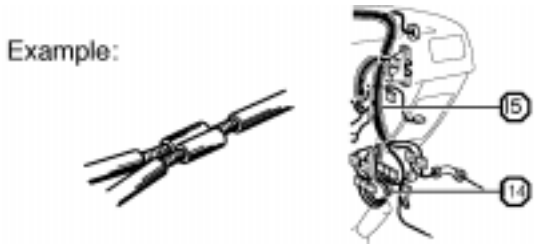

The Location of splice Point I 5 is indicated by the shaded section.

[J] : Indicates a shielded cable.

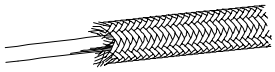

[K] : Indicates the pin number of the connector.
The numbering system is different for female and male connectors.

Example:

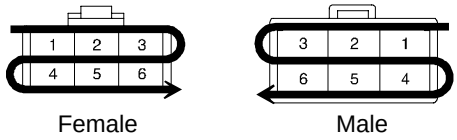

[L] : Indicates a ground point.

The first letter of the code for each ground point(s) indicates the component's location, e.g, "E" for the Engine Compartment, "I" for the Instrument Panel and Surrounding area, and "B" for the Body and Surrounding area.

[M] : Page No.

[N] **System Outline**

Current is applied at all times through the STOP fuse to TERMINAL 2 of the stop light SW.
When the ignition SW is turned on, current flows from the GAUGE fuse to TERMINAL 8 of the light failure sensor, and also flows through the rear lights warning light to TERMINAL 4 of the light failure sensor.

Stop Light Disconnection Warning

When the ignition SW is turned on and the brake pedal is pressed (Stop light SW on), if the stop light circuit is open, the current flowing from TERMINAL 7 of the light failure sensor to TERMINALS 1, 2 changes, so the light failure sensor detects the disconnection and the warning circuit of the light failure sensor is activated.
As a result, the current flows from TERMINAL 4 of the light failure sensor to TERMINAL 11 to GROUND and turns the rear lights warning light on. By pressing the brake pedal, the current flowing to TERMINAL 8 of the light failure sensor keeps the warning circuit on and holds the warning light on until the ignition SW is turned off.

[O] **Service Hints**

S6 Stop Light SW

2–1 : Closed with the brake pedal depressed

L4 Light Failure Sensor

1, 2, 7–Ground : Approx. 12 volts with the stop light SW on
4, 8–Ground : Approx. 12 volts with the ignition SW at ON position
11–Ground : Always continuity

[P] **: Parts Location**

Code	See Page	Code	See Page	Code	See Page
C7	34	L4	36	R7	37
H17	36	R6	37	S6	35

[Q] **: Relay Blocks**

Code	See Page	Relay Blocks (Relay Block Location)
1	18	R/B No.1 (Instrument Panel Brace LH)

[R] **: Junction Block and Wire Harness Connector**

Code	See Page	Junction Block and Wire Harness (Connector Location)
IB	20	Instrument Panel Wire and Instrument Panel J/B (Lower Finish Panel)
3C	22	Instrument Panel Wire and J/B No.3 (Instrument Panel Brace LH)

[S] **: Connector Joining Wire Harness and Wire Harness**

Code	See Page	Joining Wire Harness and Wire Harness (Connector Location)
IE1	42	Floor Wire and Instrument Panel Wire (Left Kick Panel)
BV1	50	Luggage Room Wire and Floor Wire (Luggage Room Left)

[T] **: Ground Points**

Code	See Page	Ground Points Location
BL	50	Under the Left Center Pillar
BO	50	Back Panel Center

[U] **: Splice Points**

Code	See Page	Wire Harness with Splice Points	Code	See Page	Wire Harness with Splice Points
I5	44	Cowl Wire	B18	50	Luggage Room Wire

[N] : Explains the system outline.

[O] : Indicates values or explains the function for reference during troubleshooting.

[P] : Indicates the reference page showing the position on the vehicle of the parts in the system circuit.

Example : Part ”L4” (Light Failure Sensor) is on page 36 of the manual.
∗ The letter in the code is from the first letter of the part, and the number indicates its order in parts starting with that letter.

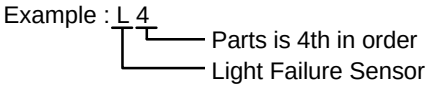

[Q] : Indicates the reference page showing the position on the vehicle of Relay Block Connectors in the system circuit.

Example : Connector ”1” is described on page 18 of this manual and is installed on the left side of the instrument panel.

[R] : Indicates the reference page showing the position on the vehicle of J/B and Wire Harness in the system circuit.

Example : Connector ”3C” connects the Instrument Panel Wire and J/B No.3. It is described on page 22 of this manual, and is installed on the instrument panel left side.

[S] : Indicates the reference page describing the wiring harness and wiring harness connector (the female wiring harness is shown first, followed by the male wiring harness).

Example : Connector ”IE1” connects the floor wire (female) and Instrument panel wire (male). It is described on page 42 of this manual, and is installed on the left side kick panel.

[T] : Indicates the reference page showing the position of the ground points on the vehicle.

Example : Ground point ”BO” is described on page 50 of this manual and is installed on the back panel center.

[U] : Indicates the reference page showing the position of the splice points on the vehicle.

Example : Splice point ”I5” is on the Cowl Wire Harness and is described on page 44 of this manual.

B HOW TO USE THIS MANUAL

The ground points circuit diagram shows the connections from all major parts to the respective ground points. When troubleshooting a faulty ground point, checking the system circuits which use a common ground may help you identify the problem ground quickly. The relationship between ground points (EA, IB and IC shown below) can also be checked this way.

I GROUND POINT

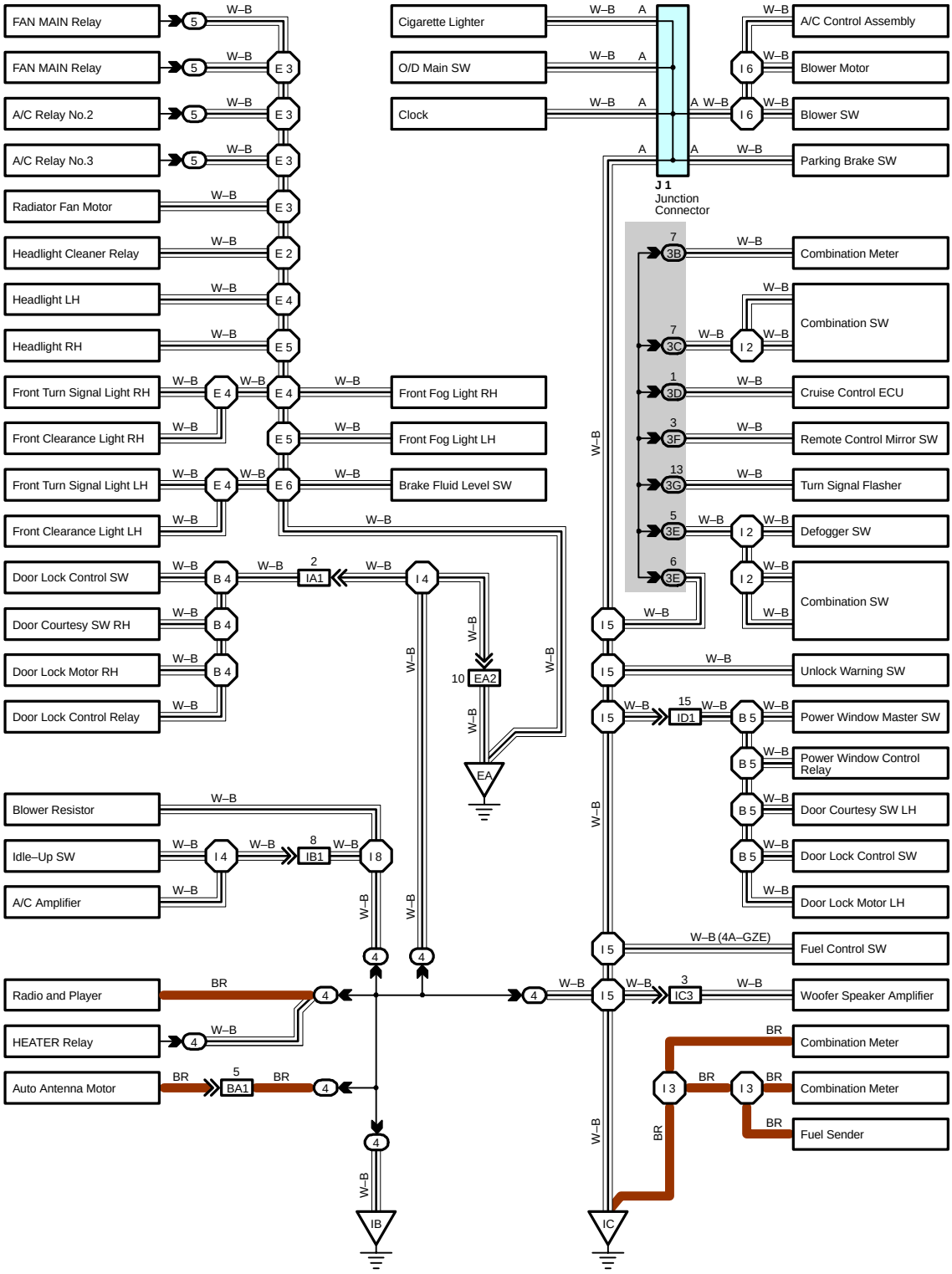

* The system shown here is an EXAMPLE ONLY. It is different to the actual circuit shown in the SYSTEM CIRCUITS SECTION.

The ”Current Flow Chart” section, describes which parts each power source (fuses, fusible links, and circuit breakers) transmits current to. In the Power Source circuit diagram, the conditions when battery power is supplied to each system are explained. Since all System Circuit diagrams start from the power source, the power source system must be fully understood.

J POWER SOURCE (Current Flow Chart)

The chart below shows the route by which current flows from the battery to each electrical source (Fusible Link, Circuit Breaker, Fuse, etc.) and other parts.

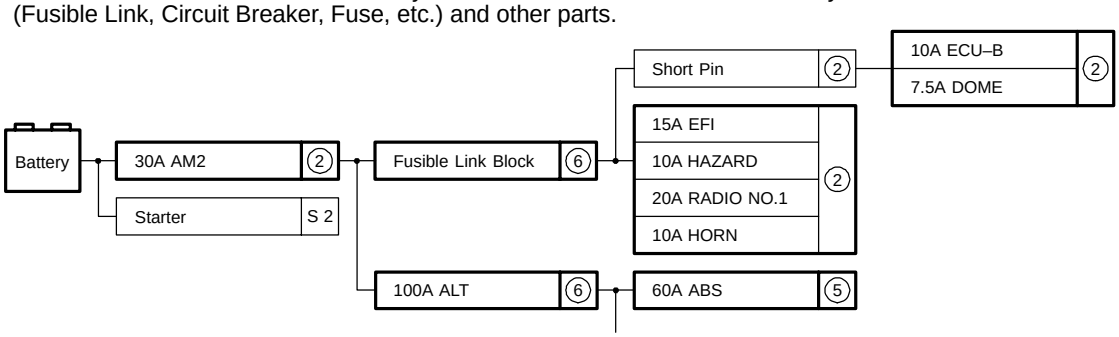

Engine Room R/B (See Page 20)

Fuse		System	Page
20A	STOP	ABS ABS and Traction Control Cruise Control Electronically Controlled Transmission Multiplex Communication System	194 187 180 166 210
10A	DOME	Cigarette Lighter Combination Meter Headlight Interior Light Key Reminder and Seat Belt Warning Light Auto Turn Off	214 230 112 122

Power Source

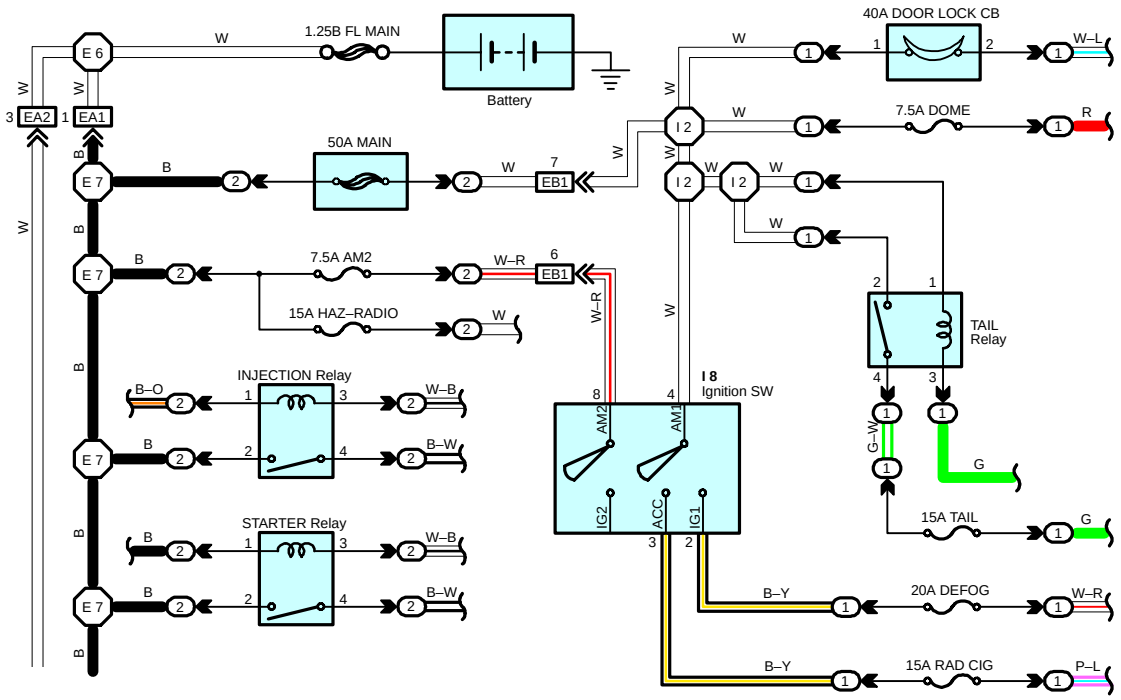

* The system shown here is an EXAMPLE ONLY. It is different to the actual circuit shown in the SYSTEM CIRCUITS SECTION.

K CONNECTOR LIST

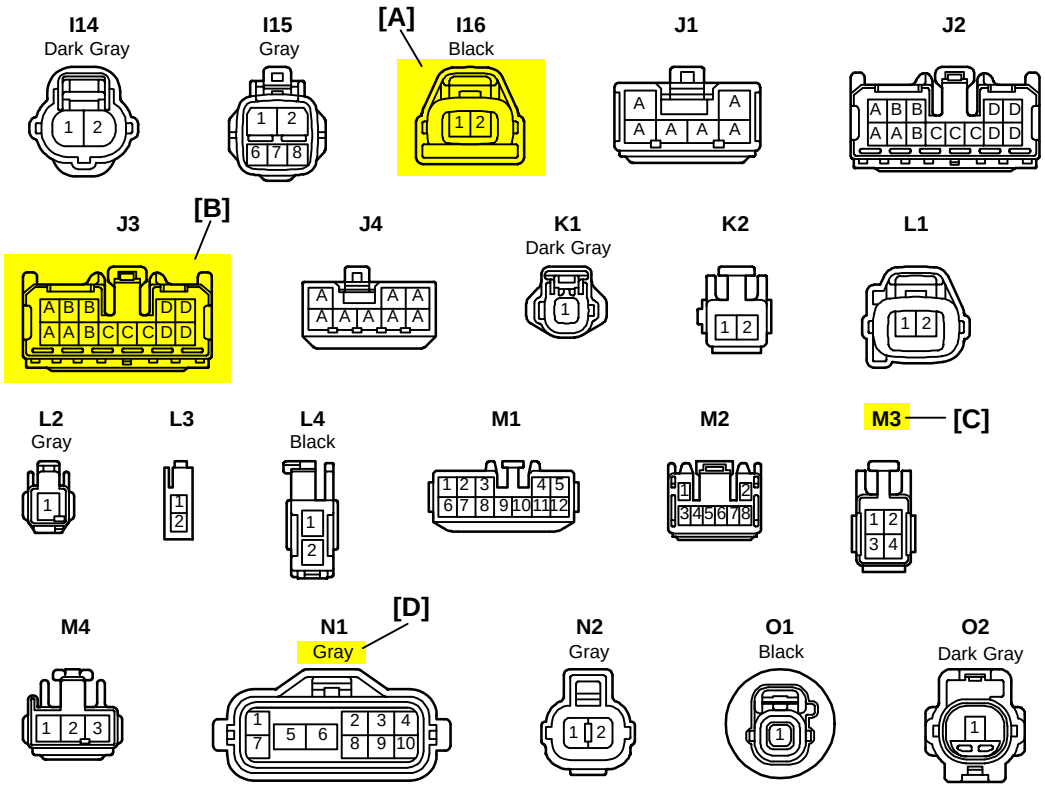

[A] : Indicates connector to be connected to a part. (The numeral indicates the pin No.)

[B] : Junction Connector
Indicates a connector which is connected to a short terminal.

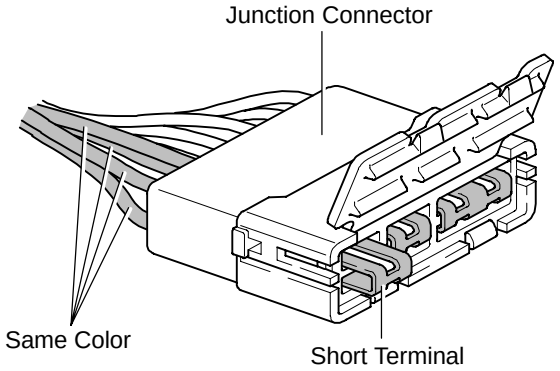

Junction connector in this manual include a short terminal which is connected to a number of wire harnesses. Always perform inspection with the short terminal installed. (When installing the wire harnesses, the harnesses can be connected to any position within the short terminal grouping. Accordingly, in other vehicles, the same position in the short terminal may be connected to a wire harness from a different part.)
Wire harness sharing the same short terminal grouping have the same color.

[C] : Parts Code
The first letter of the code is taken from the first letter of part, and the numbers indicates its order in parts which start with the same letter.

[D] : Connector Color
Connectors not indicated are milky white in color.

L PART NUMBER OF CONNECTORS

Code	Part Name	Part Number
A 1	A/C Ambient Temp. Sensor	90980–11070
A 2	A/C Condenser Fan Motor	90980–11237
A 3	A/C Condenser Fan Relay	90980–10940
A 4	A/C Condenser Fan Resistor	90980–10928
A 5	A/C Magnetic Clutch	90980–11271
A 6	A/T Oil Temp. Sensor	90980–11413
[A]	[B]	[C]
A 8	ABS Actuator	90980–11009
A 9	ABS Speed Sensor Front LH	90980–10941
A10	ABS Speed Sensor Front RH	90980–11002
A11	Airbag Sensor Front LH	90980–11856
A12	Airbag Sensor Front RH	
A13		90980–11194

Code	Part Name	Part Number
D 4	Diode (Courtesy)	90980–11608
D 5	Diode (Interior Light)	90980–10962
D 6	Diode (Moon Roof)	90980–11608
D 7	Door Lock Control Relay	90980–10848
D 8	Door Lock Control SW LH	90980–11148
D 9	Door Lock Control SW RH	
D10	Door Courtesy SW LH	90980–11097
D11	Door Courtesy SW RH	
D12	Door Courtesy SW Front LH	90980–11156
D13	Door Courtesy SW Front RH	
D14	Door Courtesy SW Rear LH	
D15	Door Courtesy SW Rear RH	
D16	and Unlock SW LH	90980–11170

[A] : Part Code

[B] : Part Name

[C] : Part Number
Toyota Part Number are indicated.

Not all of the above part numbers of the connector are established for the supply.

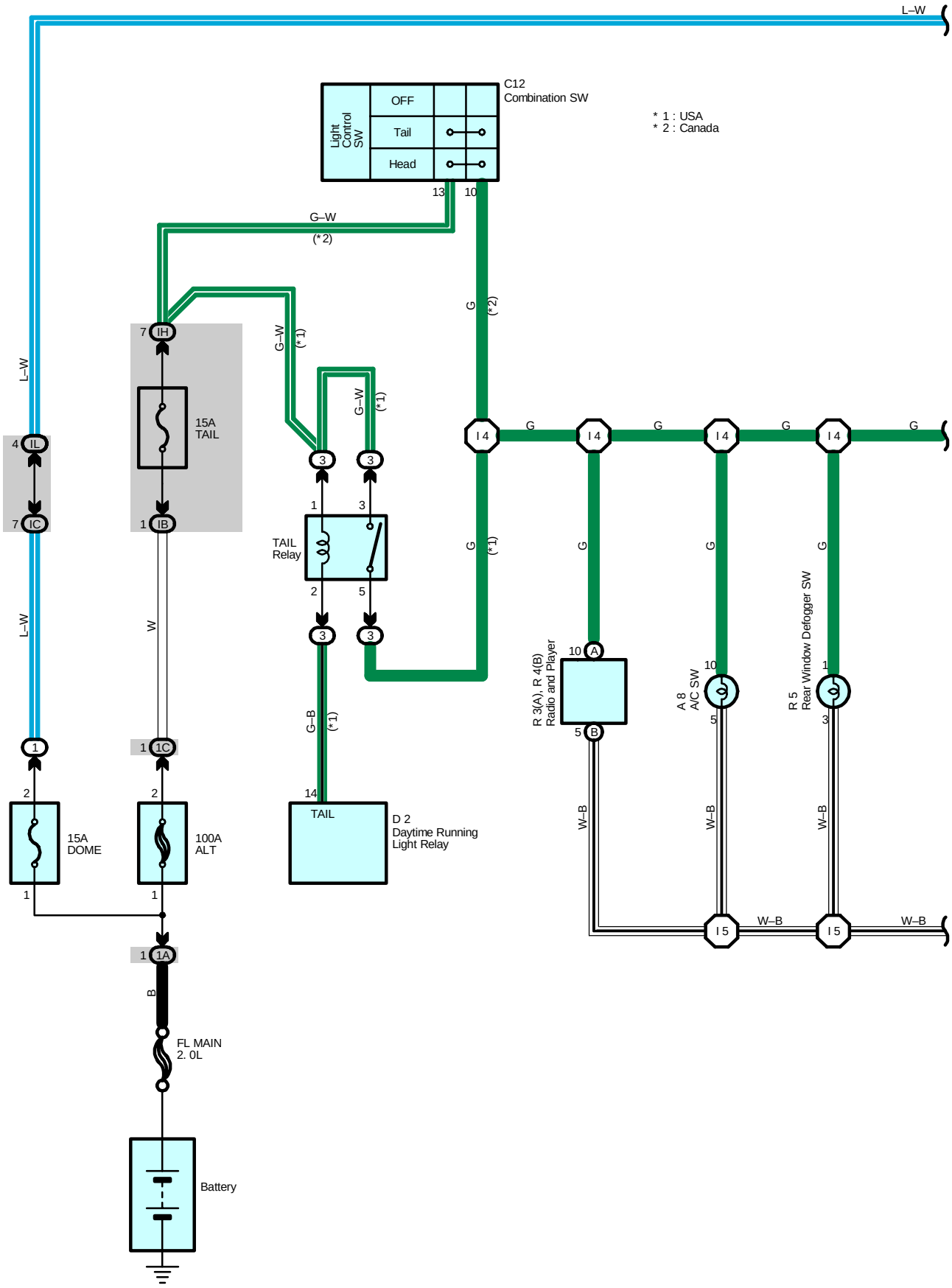
L–W
C12
Combination SW
Light Control SW
OFF
Tail
Head
* 1 : USA
* 2 : Canada
13
10
G–W
(*2)
G
(*2)
7 IH
G–W
(*1)
G–W
(*1)
L–W
4 IL
7 IC
15A
TAIL
1 IB
3
3
1
3
TAIL
Relay
2
5
3
3
I 4
G
I 4
G
I 4
G
I 4
G
G
(*1)
G
G
G
L–W
W
R 3(A), R 4(B)
Radio and Player
10 A
5 B
A 8
A/C SW
10
5
R 5
Rear Window Defogger SW
1
3
G–B
(*1)
1
1 1C
2
2
14
TAIL
D 2
Daytime Running
Light Relay
15A
DOME
100A
ALT
1
1
W–B
W–B
W–B
I 5
W–B
I 5
W–B
1 1A
B
FL MAIN
2. 0L
Battery

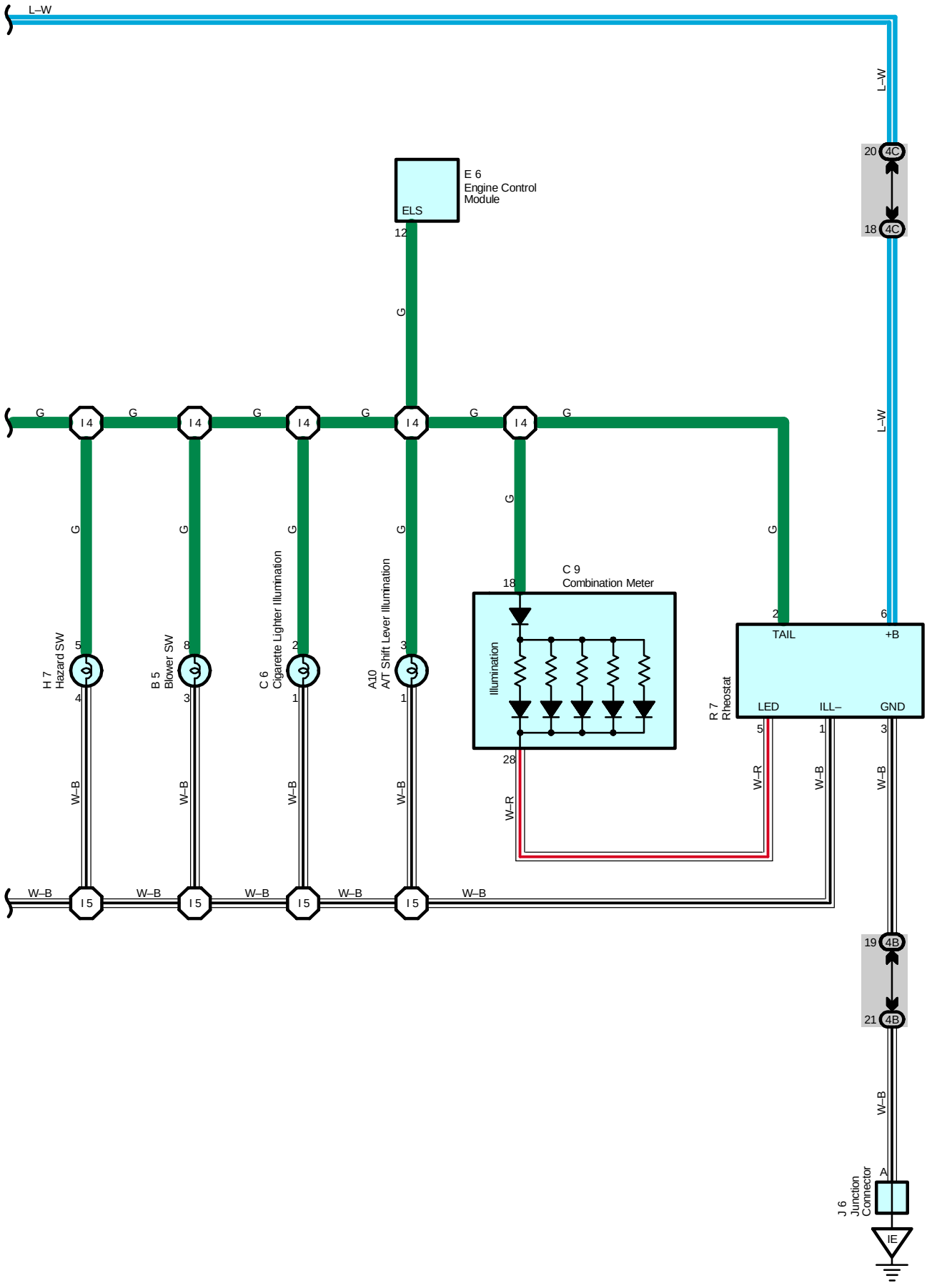
L–W
E 6
Engine Control
Module
ELS
12
G
20 4C
18 4C
I 4
H 7
Hazard SW
B 5
Blower SW
C 6
Cigarette Lighter Illumination
A10
A/T Shift Lever Illumination
C 9
Combination Meter
Illumination
18
28
R 7
Rheostat
TAIL
+B
LED
ILL–
GND
W–B
W–R
I 5
19 4B
21 4B
J 6
Junction
Connector
A
IE

Illumination

Service Hints

C12 Combination SW

10–13 : Continuity with the light control SW at Tail or Head position

TAIL Relay

5–3 : Closed with the light control SW at Tail or Head position

: Parts Location

Code	See Page	Code	See Page	Code		See Page
A8	34	C12	34	R3	A	35
A10	34	D2	34	R4	B	35
B5	34	E6	34	R5		35
C6	34	H7	35	R7		35
C9	34	J6	35			

: Relay Blocks

Code	See Page	Relay Blocks (Relay Block Location)
1	22	Engine Room R/B (Engine Compartment Left)
3	28	RH R/B (Right Side of the Instrument Panel Reinforcement)

: Junction Block and Wire Harness Connector

Code	See Page	Junction Block and Wire Harness (Connector Location)
IB	25	Engine Room Main Wire and Instrument Panel J/B (Lower Finish Panel)
IC		
IH	25	Instrument Panel Wire and Instrument Panel J/B (Lower Finish Panel)
IL	24	
1A	22	Engine Wire and Engine Room J/B (Engine Compartment Left)
1C	22	Engine Room Main Wire and Engine Room J/B (Engine Compartment Left)
4B	30	Instrument Panel Wire and Center J/B (Behind the Combination Meter)
4C		

: Ground Points

Code	See Page	Ground Points Location
IE	40	Behind the Combination Meter

: Splice Points

Code	See Page	Wire Harness with Splice Points	Code	See Page	Wire Harness with Splice Points
I4	42	Instrument Panel Wire	I5	42	Instrument Panel Wire

Interior Light

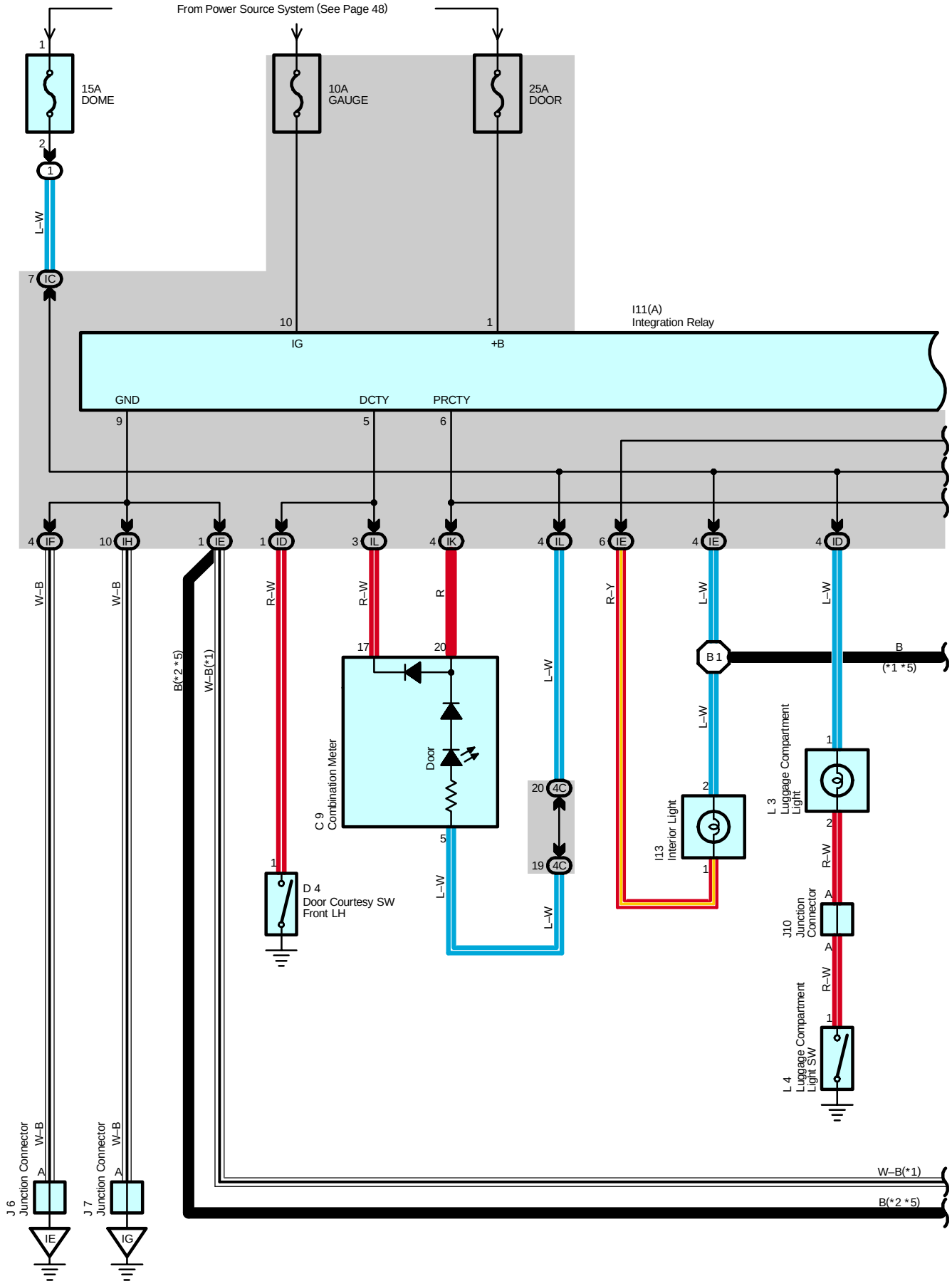

* 1 : w/ Moon Roof
* 2 : w/o Moon Roof
* 3 : w/o Door Lock Control
* 4 : w/ Door Lock Control
* 5 : w/ Automatic Glare–Resistant EC Mirror
* 6 : w/o Automatic Glare–Resistant EC Mirror

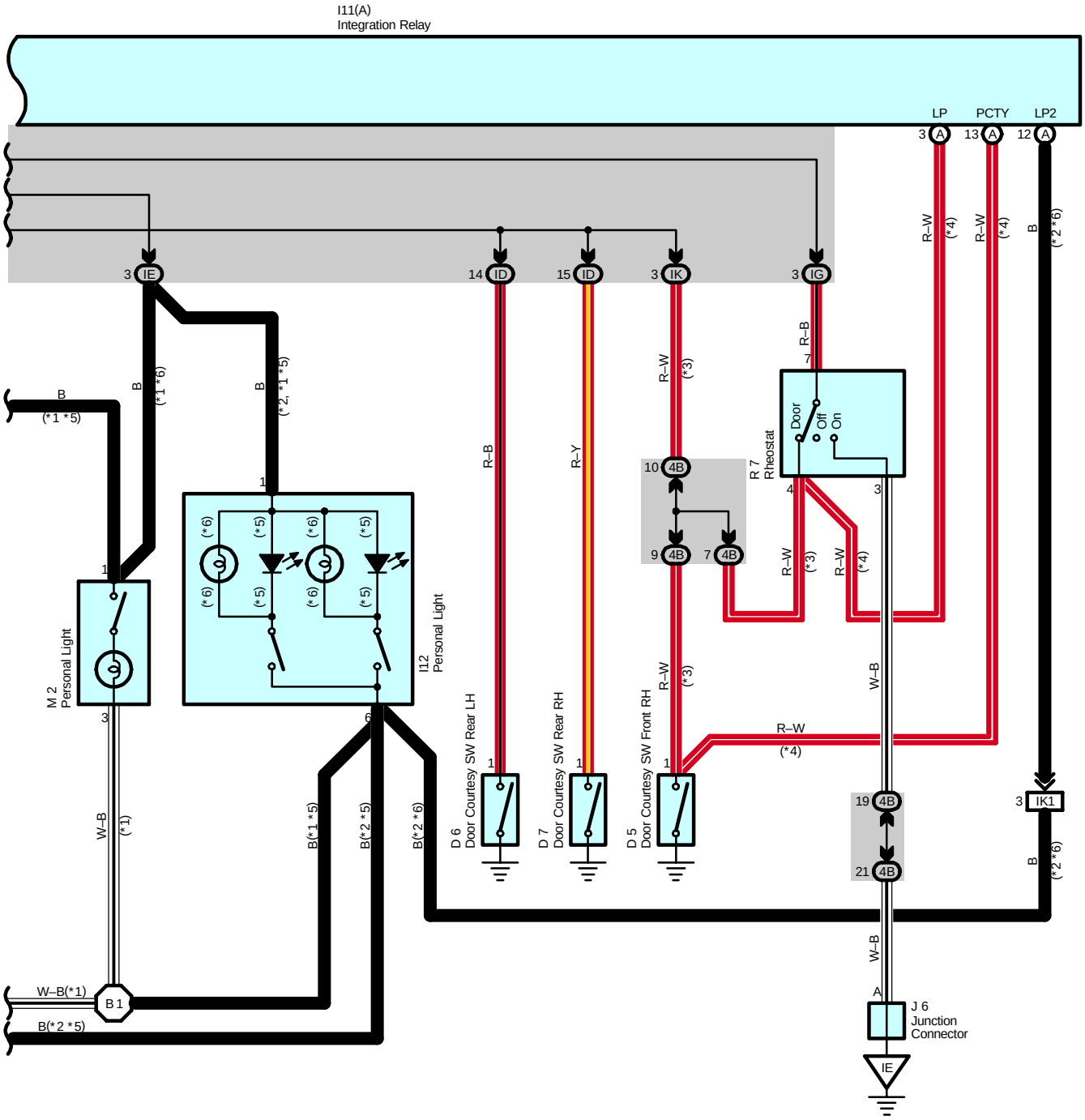

Interior Light

Service Hints

D4, D5, D6, D7 Door Courtesy SW Front LH, RH, Rear LH, RH

1–Ground : Closed with the door open

L4 Luggage Compartment Light SW

1–Ground : Closed with the luggage compartment door open

: Parts Location

Code	See Page	Code	See Page	Code	See Page
C9	34	I11 A	35	J10	36
D4	36	I12	36	L3	36
D5	36	I13	36	L4	36
D6	36	J6	35	M2	37
D7	36	J7	35	R7	35

: Relay Blocks

Code	See Page	Relay Blocks (Relay Block Location)
1	22	Engine Room R/B (Engine Compartment Left)

: Junction Block and Wire Harness Connector

Code	See Page	Junction Block and Wire Harness (Connector Location)
IC	25	Engine Room Main Wire and Instrument Panel J/B (Lower Finish Panel)
ID	25	Floor Wire and Instrument Panel J/B (Lower Finish Panel)
IE	25	Roof Wire and Instrument Panel J/B (Lower Finish Panel)
IF	25	Instrument Panel Wire and Instrument Panel J/B (Lower Finish Panel)
IG		
IH		
IK	24	
IL		
4B	30	Instrument Panel Wire and Center J/B (Behind the Combination Meter)
4C		

: Connector Joining Wire Harness and Wire Harness

Code	See Page	Joining Wire Harness and Wire Harness (Connector Location)
IK1	42	Roof Wire and Instrument Panel Wire (Left Side of the Instrument Panel Reinforcement)

: Ground Points

Code	See Page	Ground Points Location
IE	40	Behind the Combination Meter
IG	40	Right Kick Panel

: Splice Points

Code	See Page	Wire Harness with Splice Points	Code	See Page	Wire Harness with Splice Points
B1	44	Roof Wire			

A INTRODUCTION

This manual consists of the following 13 sections:

No.	Section	Description
A	INDEX	Index of the contents of this manual.
	INTRODUCTION	Brief explanation of each section.
B	HOW TO USE THIS MANUAL	Instructions on how to use this manual.
C	TROUBLE–SHOOTING	Describes the basic inspection procedures for electrical circuits.
D	ABBREVIATIONS	Defines the abbreviations used in this manual.
E	GLOSSARY OF TERMS AND SYMBOLS	Defines the symbols and functions of major parts.
F	RELAY LOCATIONS	Shows position of the Electronic Control Unit, Relays, Relay Block, etc. This section is closely related to the system circuit.
G	ELECTRICAL WIRING ROUTING	Describes position of Parts Connectors, Splice points, Ground points, etc. This section is closely related to the system circuit.
H	INDEX	Index of the system circuits.
	SYSTEM CIRCUITS	Electrical circuits of each system are shown from the power supply through ground points. Wiring connections and their positions are shown and classified by code according to the connection method. (Refer to the section, ”How to use this manual”). The ”System Outline” and ”Service Hints” useful for troubleshooting are also contained in this section.
I	GROUND POINT	Shows ground positions of all parts described in this manual.
J	POWER SOURCE (Current Flow Chart)	Describes power distribution from the power supply to various electrical loads.
K	CONNECTOR LIST	Describes the form of the connectors for the parts appeared in this book. This section is closely related to the system circuit.
L	PART NUMBER OF CONNECTORS	Indicates the part number of the connectors used in this manual.
M	OVERALL ELECTRICAL WIRING DIAGRAM	Provides circuit diagrams showing the circuit connections.

Light Reminder Buzzer and Key Reminder Buzzer

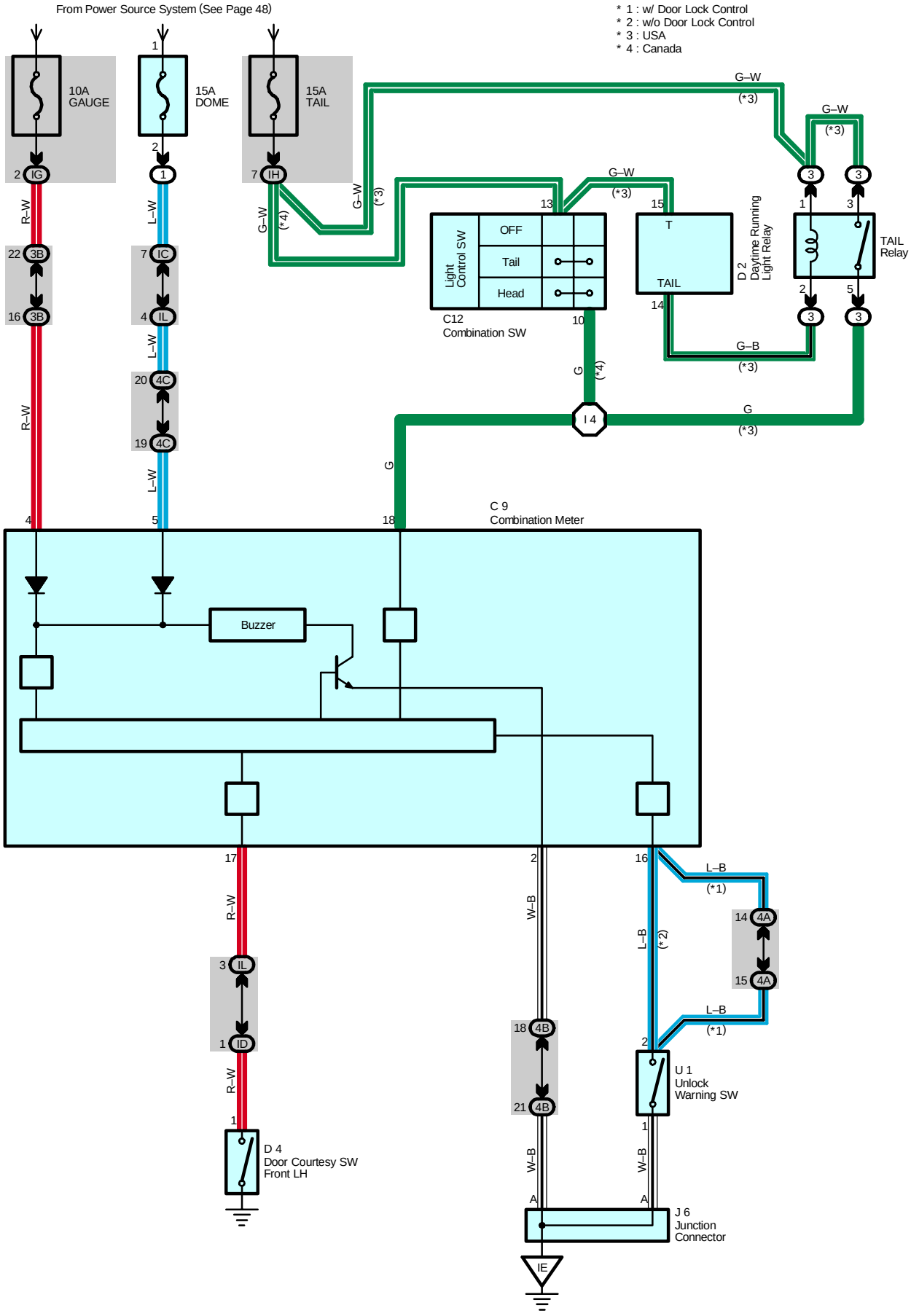

System Outline

The current is applied at all times to TERMINAL 5 of the combination meter through the DOME fuse.
When the ignition SW is turned to ON position, the current flows to TERMINAL 4 of the combination meter through the GAUGE fuse. When the light control SW is turned to Tail or Head position, current is applied to TERMINAL 18 of the combination meter through the TAIL fuse via the TAIL relay (USA) or the light control SW (Canada).

1. Light Reminder System

When the light control SW is in Tail or Head position, the ignition SW turned to OFF from ON position, and the driver's door opened (Door courtesy SW on), the current flows to TERMINAL 4 of the combination meter stops. As a result, the combination meter is activated and current flows from TERMINAL 5 of the combination meter to TERMINAL 2 to GROUND, the buzzer in the combination meter goes on to remind the light is lighting up.

2. Key Reminder System

When the driver door is opened with the ignition SW off and ignition key remaining in the key cylinder (Unlock warning SW on), a signal is input from the unlock warning SW to TERMINAL 16 of the combination meter, and from the door courtesy SW front LH to TERMINAL 17 of the combination meter. As a result, the buzzer in the combination meter goes on and warns the driver that the key is remaining in the key cylinder.

Service Hints

C9 Combination Meter

4–Ground : Approx. 12 volts with the ignition SW at ON position
18–Ground : Approx. 12 volts with the light control SW at Tail or Head position
17–Ground : Continuity with the driver's door open
2–Ground : Always continuity

D4 Door Courtesy SW Front LH

1–Ground : Closed with the driver's door open

U1 Unlock Warning SW

2–1 : Closed with the ignition key in cylinder

○ : Parts Location

Code	See Page	Code	See Page	Code	See Page
C9	34	D2	34	J6	35
C12	34	D4	36	U1	35

⬭ : Relay Blocks

Code	See Page	Relay Blocks (Relay Block Location)
1	22	Engine Room R/B (Engine Compartment Left)
3	28	RH R/B (Right Side of the Instrument Panel Reinforcement)

⬭ : Junction Block and Wire Harness Connector

Code	See Page	Junction Block and Wire Harness (Connector Location)
IC	25	Engine Room Main Wire and Instrument Panel J/B (Lower Finish Panel)
ID	25	Floor Wire and Instrument Panel J/B (Lower Finish Panel)
IG	25	Instrument Panel Wire and Instrument Panel J/B (Lower Finish Panel)
IH		
IL	24	
3B	28	Instrument Panel Wire and RH J/B (Right Side of the Instrument Panel Reinforcement)
4A	30	Instrument Panel Wire and Center J/B (Behind the Combination Meter)
4B		
4C		

▽ : Ground Points

Code	See Page	Ground Points Location
IE	40	Behind the Combination Meter

Light Reminder Buzzer and Key Reminder Buzzer

 **: Splice Points**

Code	See Page	Wire Harness with Splice Points	Code	See Page	Wire Harness with Splice Points
I4	42	Instrument Panel Wire			

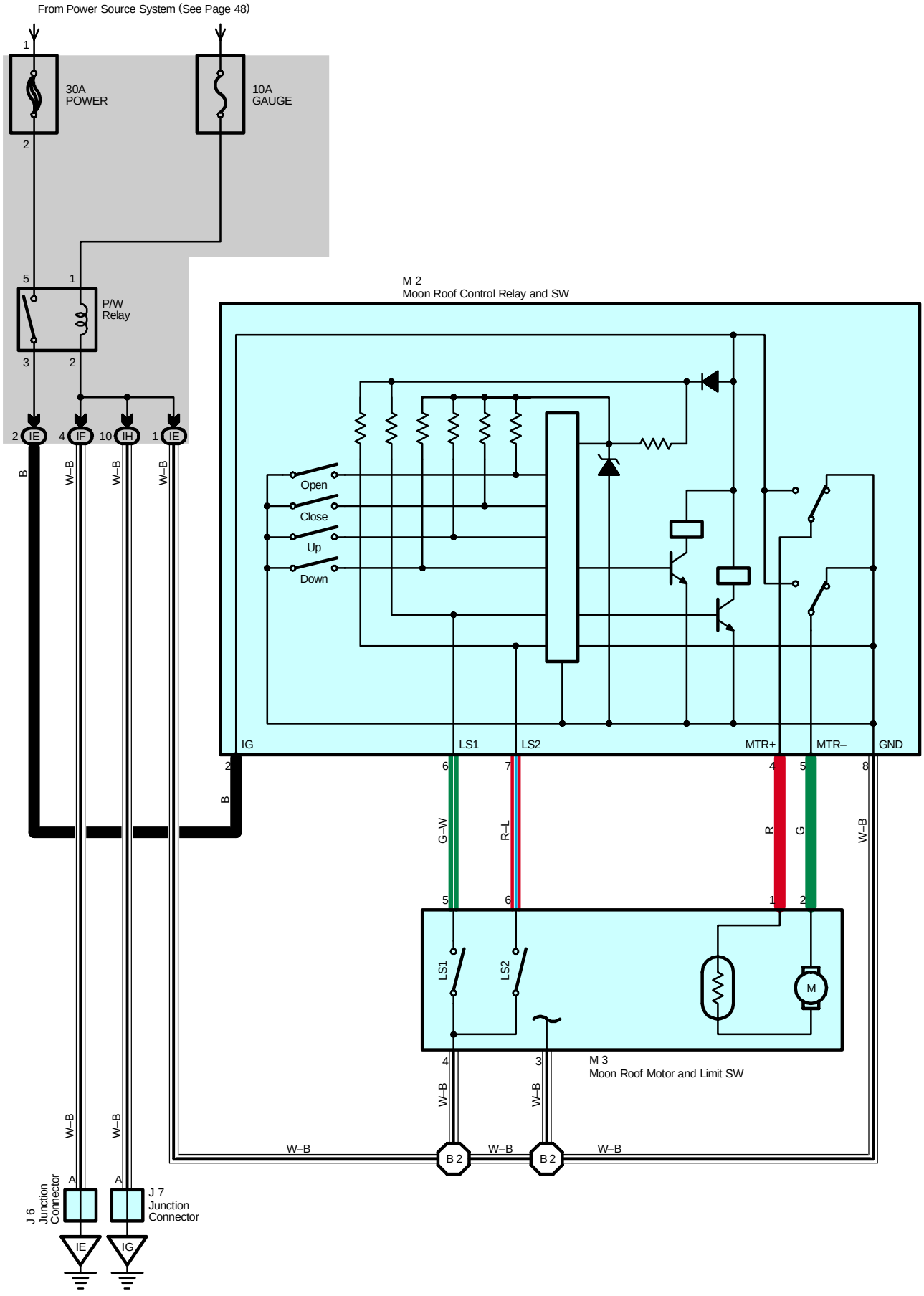
From Power Source System (See Page 48)
30A
POWER
10A
GAUGE
P/W
Relay
M 2
Moon Roof Control Relay and SW
Open
Close
Up
Down
IG
LS1
LS2
MTR+
MTR–
GND
G–W
R–L
R
G
W–B
B
M 3
Moon Roof Motor and Limit SW
B 2
B 2
J 6
Junction
Connector
J 7
Junction
Connector
IE
IG

System Outline

The moon roof can be operated when the ignition SW is turned to ON position.

1. Slide Open Operation

The moon roof fully opens automatically by pressing the slide open button of the moon roof control SW once. If the moon roof control switch is pressed again when the moon roof is operating, the movement of the moon roof stops.
The operation of slide open is not worked when the moon roof at tilt up position.

2. Slide Close Operation

If you keep pressing the slide close button of the moon roof control SW when the moon roof is open, the moon roof closes half and stops the operation once. If you keep pressing the slide close once again, the moon roof fully closes.

3. Tilt Up Operation

If you press the tilt up button of the moon roof control SW, the moon roof is tilted up. However, the moon roof is not tilted up when it is open

4. Tilt Down Operation

If you press the tilt down button when the tilt up of the moon roof control SW is pressed, the moon roof is tilted down.

Service Hints

P/W Relay

5–3 : Closed with the ignition SW at ON position

M2 Moon Roof Control Relay and SW

2–Ground : Approx. 12 volts with the ignition SW at ON position
8–Ground : Always continuity

: Parts Location

Code	See Page	Code	See Page	Code	See Page
J6	35	M2	37		
J7	35	M3	37		

: Junction Block and Wire Harness Connector

Code	See Page	Junction Block and Wire Harness (Connector Location)
IE	25	Roof Wire and Instrument Panel J/B (Lower Finish Panel)
IF	25	Instrument Panel Wire and Instrument Panel J/B (Lower Finish Panel)
IH		

: Ground Points

Code	See Page	Ground Points Location
IE	40	Behind the Combination Meter
IG	40	Right Kick Panel

: Splice Points

Code	See Page	Wire Harness with Splice Points	Code	See Page	Wire Harness with Splice Points
B2	44	Roof Wire			

1 COROLLA

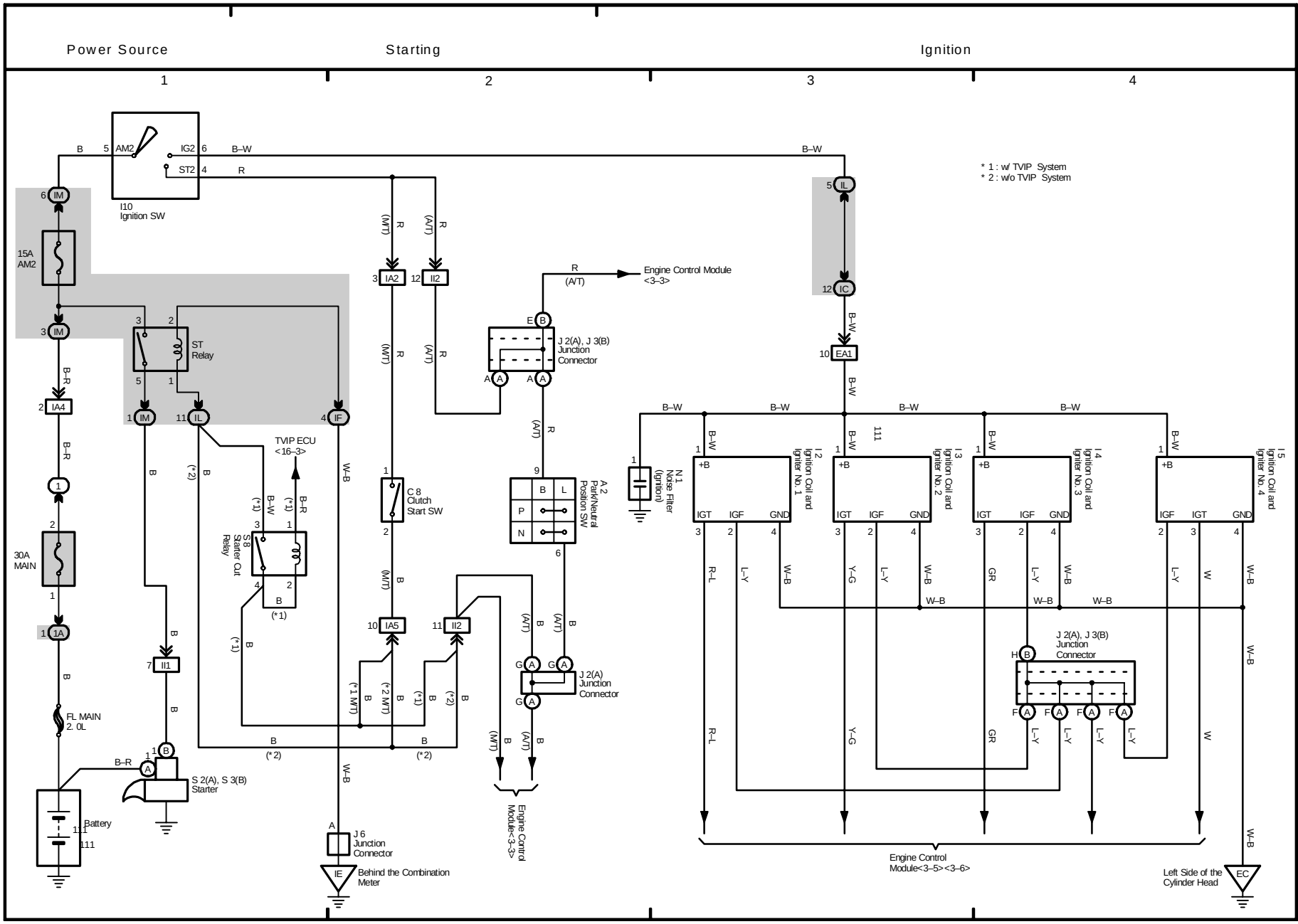
Power Source
Starting
Ignition
1
2
3
4
* 1 : w/ TVIP System
* 2 : w/o TVIP System
I10 Ignition SW
AM2
IG2
ST2
15A AM2
30A MAIN
FL MAIN 2. 0L
ST Relay
S8 Starter Cut Relay
TVIP ECU <16–3>
C 8 Clutch Start SW
A2 Park/Neutral Position SW
J 2(A), J 3(B) Junction Connector
J 2(A) Junction Connector
J 6 Junction Connector
Behind the Combination Meter
Engine Control Module <3–3>
Engine Control Module<3–3>
N1 Noise Filter (Ignition)
I2 Ignition Coil and Igniter No. 1
I3 Ignition Coil and Igniter No. 2
I4 Ignition Coil and Igniter No. 3
I5 Ignition Coil and Igniter No. 4
Engine Control Module<3–5><3–6>
Left Side of the Cylinder Head
S 2(A), S 3(B) Starter
Battery

M OVERALL ELECTRICAL WIRING DIAGRAM

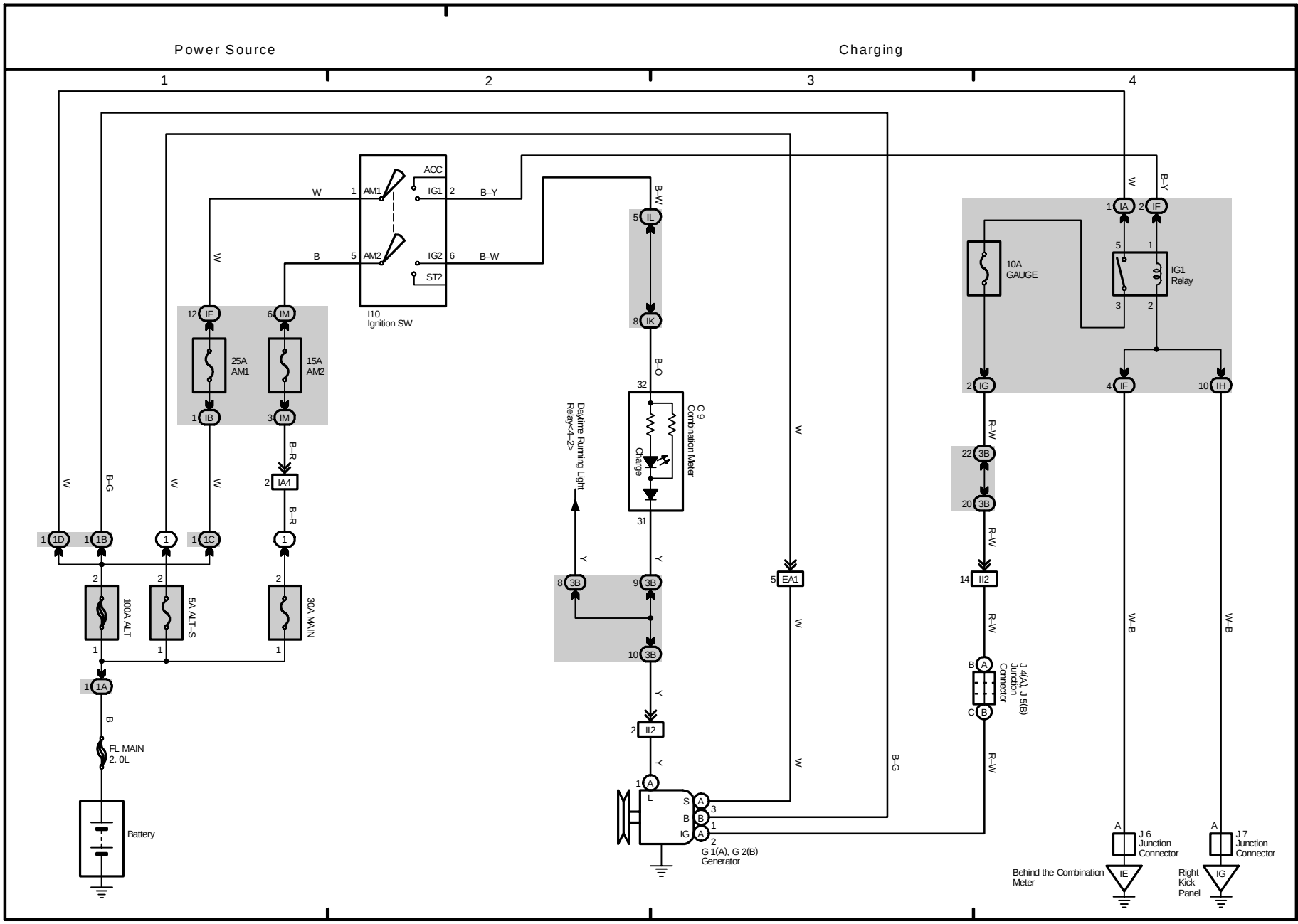
Power Source
Charging
1
2
3
4
ACC
AM1
IG1
AM2
IG2
ST2
I10
Ignition SW
25A
AM1
15A
AM2
100A ALT
5A ALT–S
30A MAIN
FL MAIN
2. 0L
Battery
Daytime Running Light
Relay<4–2>
C 9
Combination Meter
Charge
G 1(A), G 2(B)
Generator
10A
GAUGE
IG1
Relay
J 4(A), J 5(B)
Junction
Connector
J 6
Junction
Connector
J 7
Junction
Connector
Behind the Combination
Meter
Right
Kick
Panel

(Cont. next page)

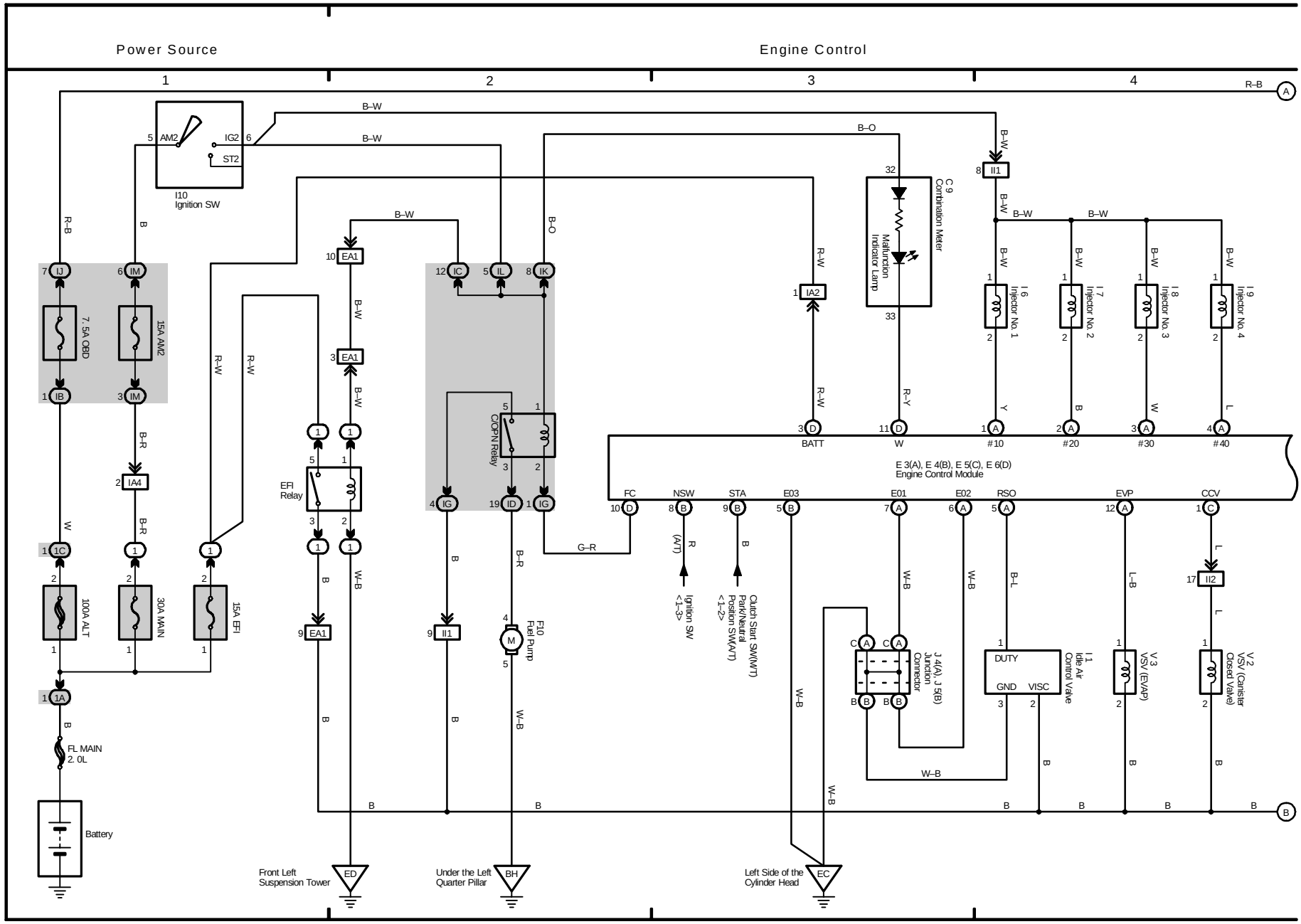

M OVERALL ELECTRICAL WIRING DIAGRAM

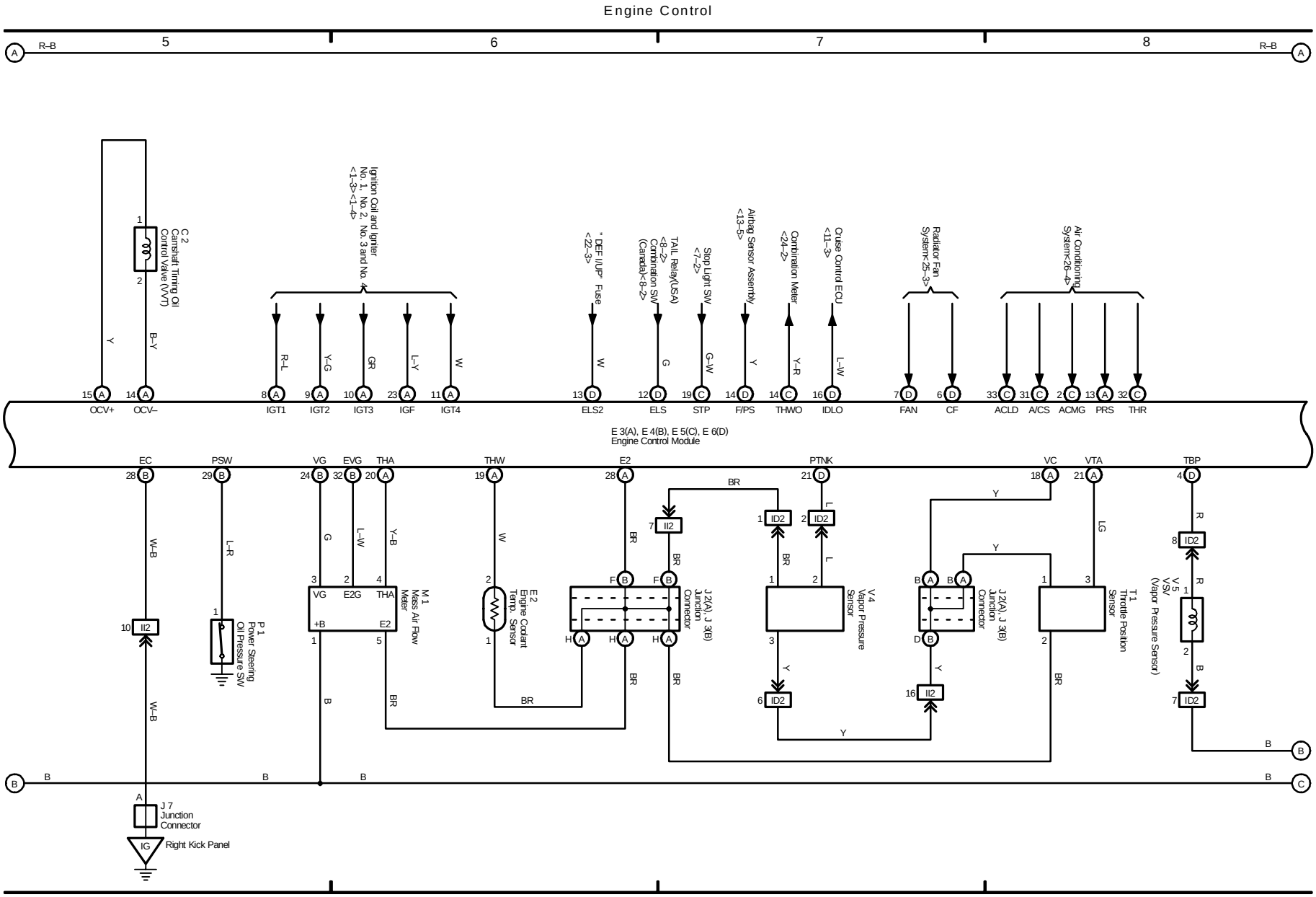
Engine Control
5
6
7
8
R–B
C 2 Camshaft Timing Oil Control Valve (VVT)
Ignition Coil and Igniter No. 1, No. 2, No. 3 and No. 4 <1–3> <1–4>
"DEF I/UP" Fuse <22–3>
TAIL Relay(USA) <8–2> Combination SW (Canada)<8–2>
Stop Light SW <7–2>
Airbag Sensor Assembly <13–5>
Combination Meter <24–2>
Cruise Control ECU <11–3>
Radiator Fan System<25–3>
Air Conditioning System<26–4>
OCV+
OCV–
IGT1
IGT2
IGT3
IGF
IGT4
ELS2
ELS
STP
F/PS
THWO
IDLO
FAN
CF
ACLD
A/CS
ACMG
PRS
THR
E 3(A), E 4(B), E 5(C), E 6(D) Engine Control Module
EC
PSW
VG
EVG
THA
THW
E2
PTNK
VC
VTA
TBP
M 1 Mass Air Flow Meter
E 2 Engine Coolant Temp. Sensor
J 2(A), J 3(B) Junction Connector
V 4 Vapor Pressure Sensor
T 1 Throttle Position Sensor
V 5 VSV (Vapor Pressure Sensor)
P 1 Power Steering Oil Pressure SW
J 7 Junction Connector
IG
Right Kick Panel

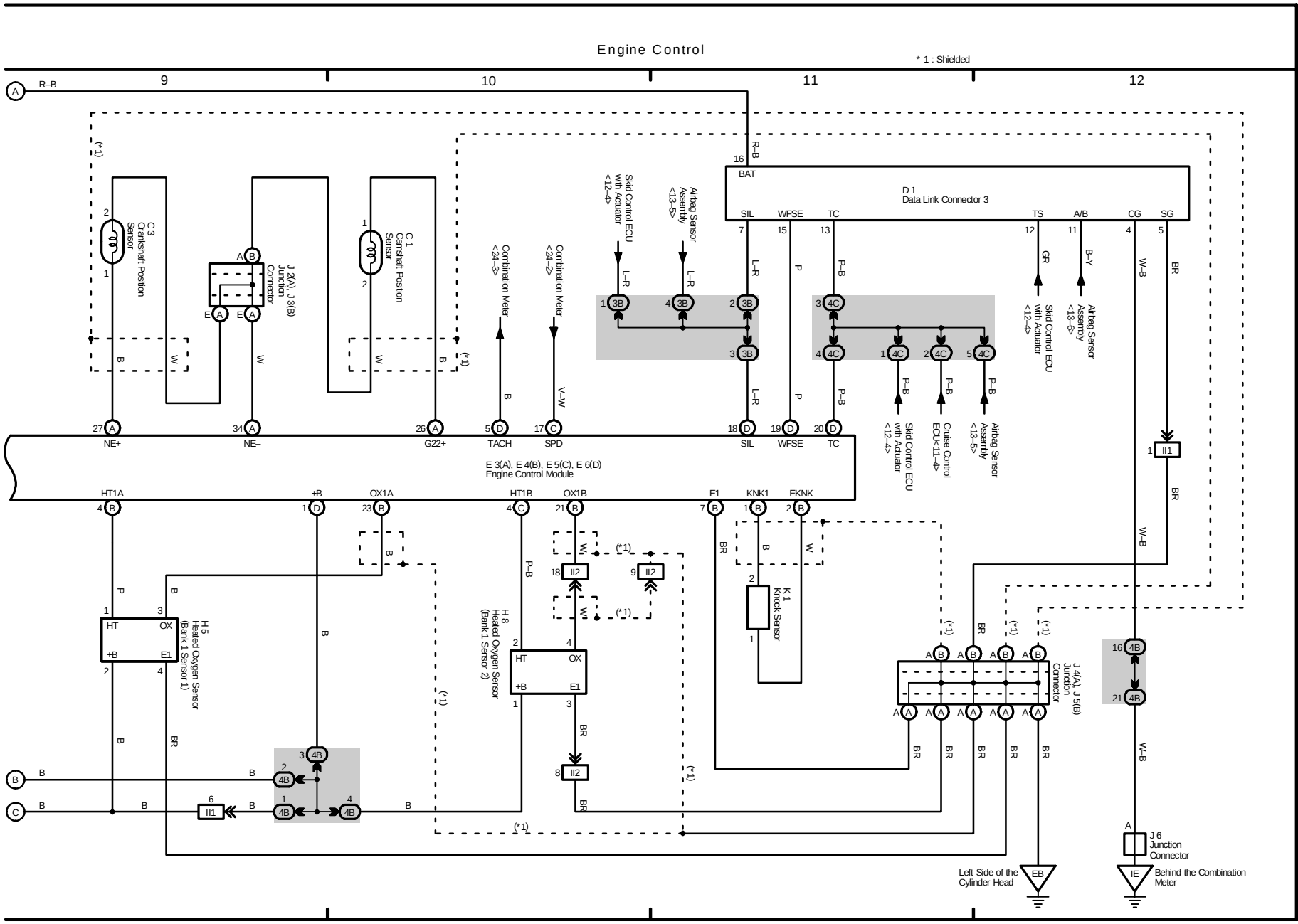
Engine Control
* 1 : Shielded
9
10
11
12
R–B
(*1)
C 3 Crankshaft Position Sensor
J 2(A), J 3(B) Junction Connector
C 1 Camshaft Position Sensor
Combination Meter <24–3>
Combination Meter <24–2>
Skid Control ECU with Actuator <12–4>
Airbag Sensor Assembly <13–5>
D 1 Data Link Connector 3
BAT
SIL
WFSE
TC
TS
A/B
CG
SG
Skid Control ECU with Actuator <12–4>
Airbag Sensor Assembly <13–6>
NE+
NE–
G22+
TACH
SPD
E 3(A), E 4(B), E 5(C), E 6(D) Engine Control Module
Skid Control ECU with Actuator <12–4>
Cruise Control ECU<11–4>
Airbag Sensor Assembly <13–5>
HT1A
+B
OX1A
HT1B
OX1B
E1
KNK1
EKNK
H 5 Heated Oxygen Sensor (Bank 1 Sensor 1)
H 8 Heated Oxygen Sensor (Bank 1 Sensor 2)
K 1 Knock Sensor
J 4(A), J 5(B) Junction Connector
J 6 Junction Connector
Left Side of the Cylinder Head
Behind the Combination Meter
EB
IE

M OVERALL ELECTRICAL WIRING DIAGRAM

(Cont. next page)

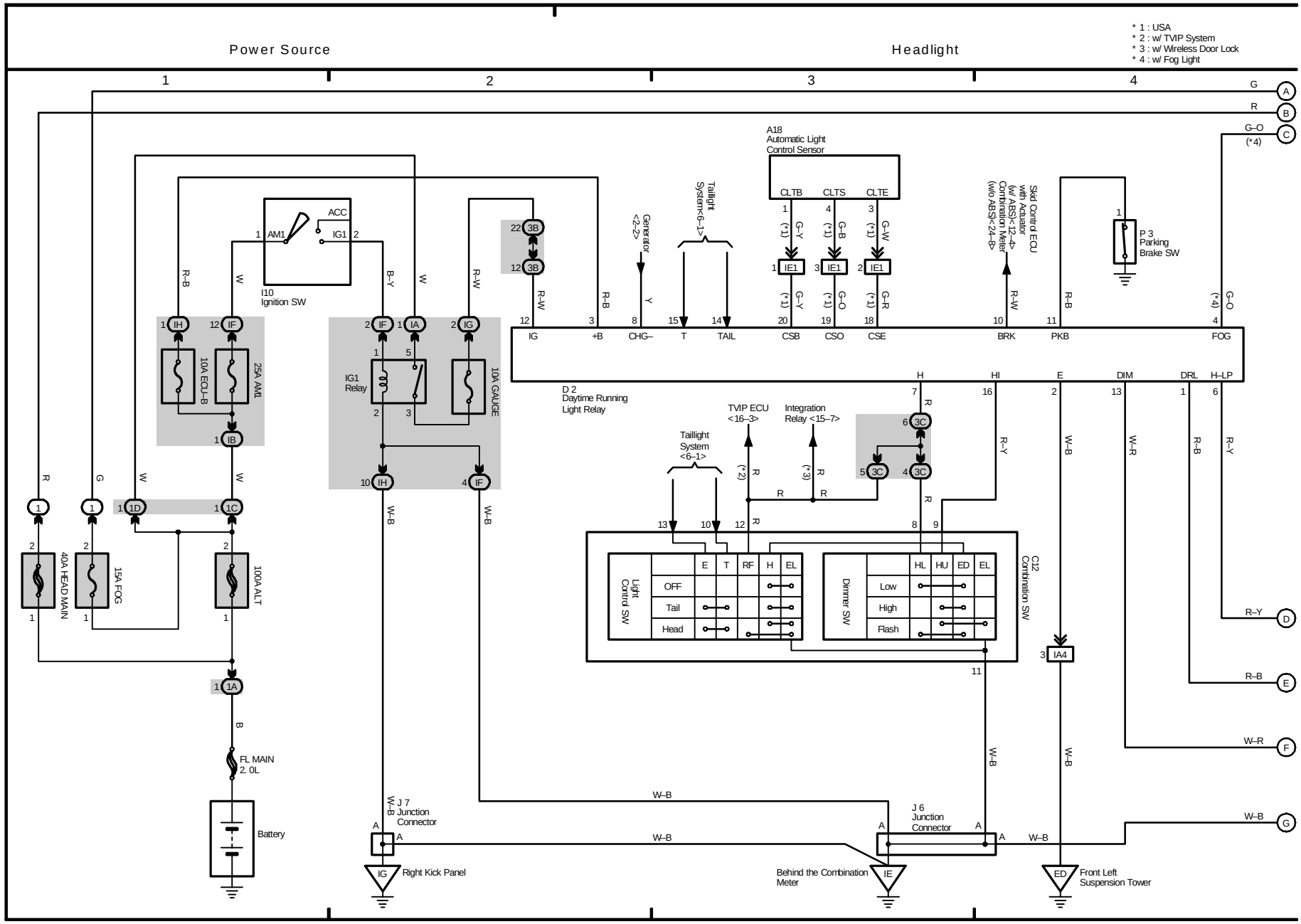

4 COROLLA (Cont' d)

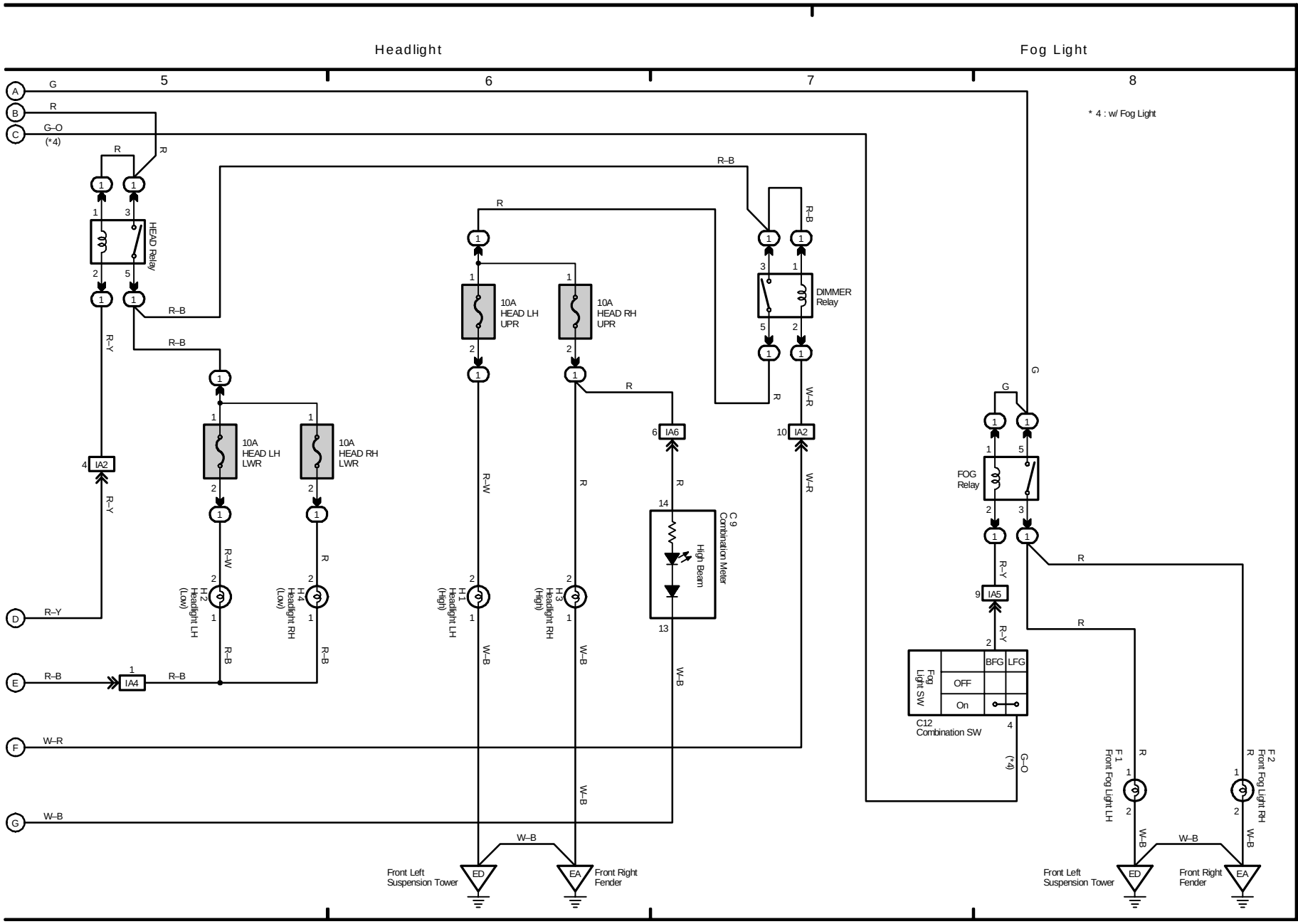

M OVERALL ELECTRICAL WIRING DIAGRAM

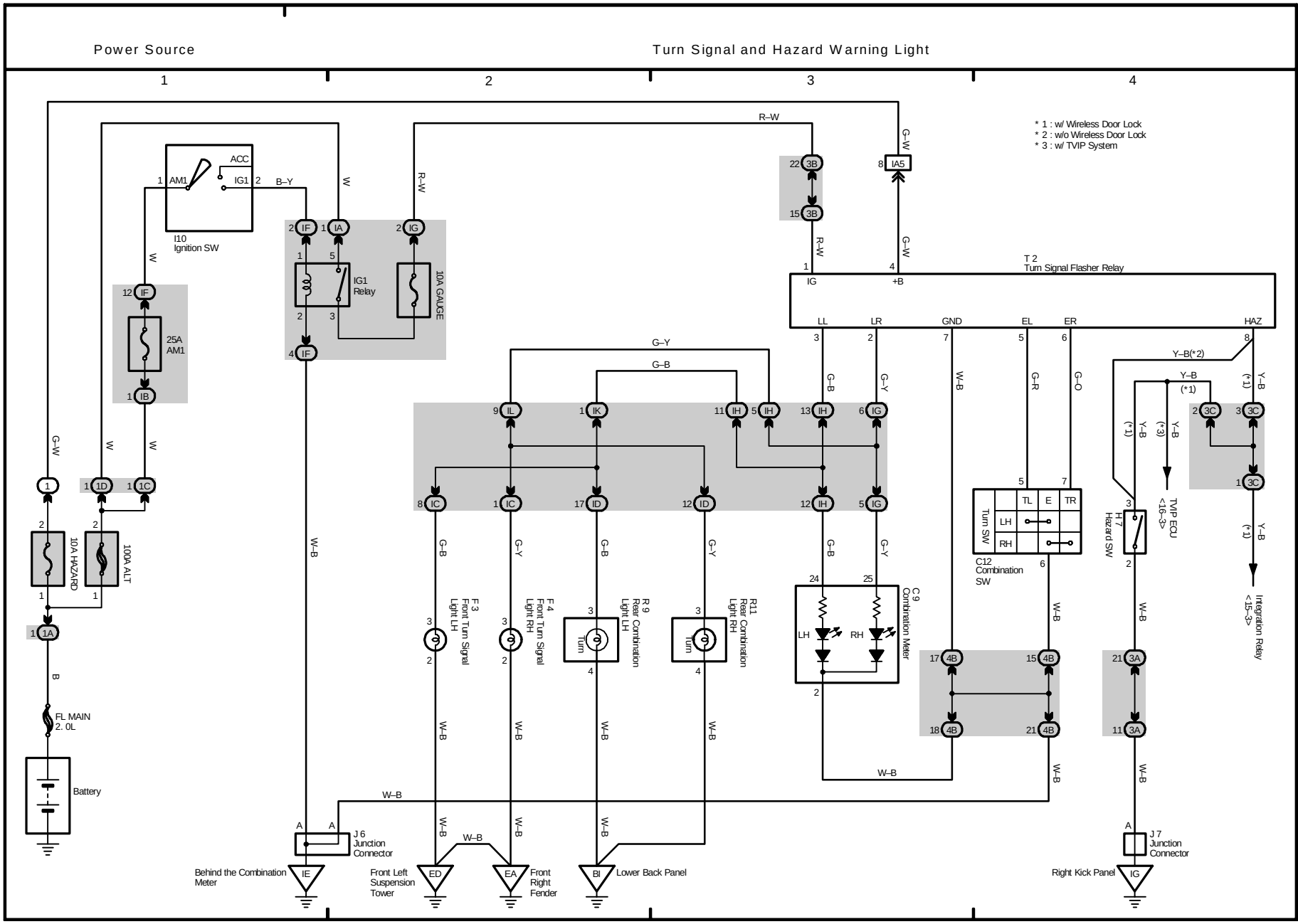
Power Source
Turn Signal and Hazard Warning Light
1
2
3
4
* 1 : w/ Wireless Door Lock
* 2 : w/o Wireless Door Lock
* 3 : w/ TVIP System
I10
Ignition SW
ACC
AM1
IG1
B–Y
IG1
Relay
10A GAUGE
25A
AM1
10A HAZARD
100A ALT
FL MAIN
2. 0L
Battery
T 2
Turn Signal Flasher Relay
IG
+B
LL
LR
GND
EL
ER
HAZ
C12
Combination
SW
Turn SW
LH
RH
TL
E
TR
H 7
Hazard SW
TVIP ECU
<16–3>
Integration Relay
<15–3>
C 9
Combination Meter
F 3
Front Turn Signal
Light LH
F 4
Front Turn Signal
Light RH
R 9
Rear Combination
Light LH
R11
Rear Combination
Light RH
Turn
J 6
Junction
Connector
J 7
Junction
Connector
Behind the Combination
Meter
Front Left
Suspension
Tower
Front
Right
Fender
Lower Back Panel
Right Kick Panel
R–W
G–W
W
W–B
G–Y
G–B
Y–B
Y–B(*2)
G–R
G–O
B

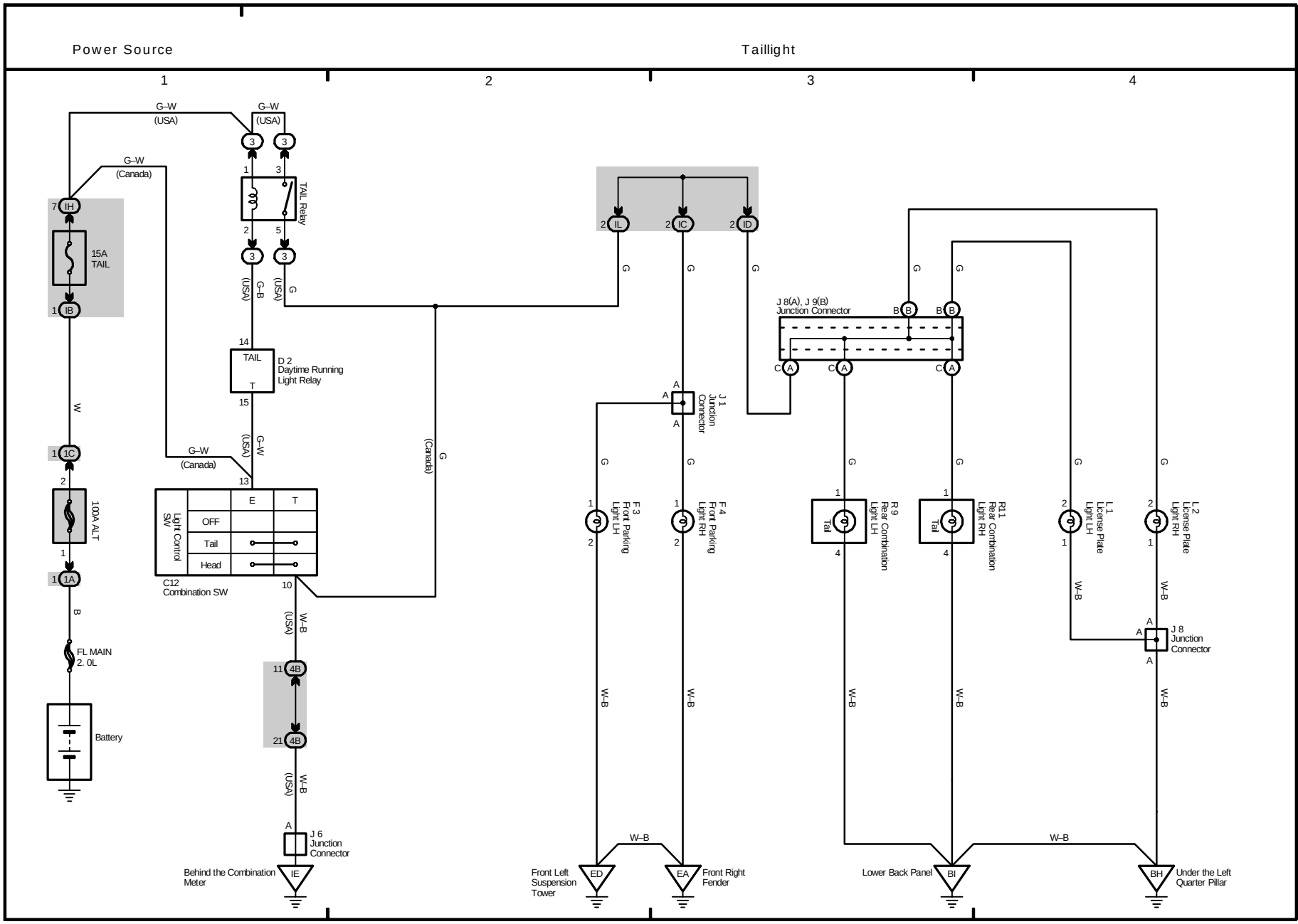
Power Source
Taillight
1
2
3
4
G–W (USA)
G–W (Canada)
TAIL Relay
15A TAIL
100A ALT
FL MAIN 2. 0L
Battery
D 2 Daytime Running Light Relay
Light Control SW
E
T
OFF
Tail
Head
C12 Combination SW
J 6 Junction Connector
Behind the Combination Meter
J 1 Junction Connector
F 3 Front Parking Light LH
F 4 Front Parking Light RH
Front Left Suspension Tower
Front Right Fender
J 8(A), J 9(B) Junction Connector
R 9 Rear Combination Light LH
R1 1 Rear Combination Light RH
L 1 License Plate Light LH
L 2 License Plate Light RH
J 8 Junction Connector
Lower Back Panel
Under the Left Quarter Pillar
G
W
B
W–B
G–B

M OVERALL ELECTRICAL WIRING DIAGRAM

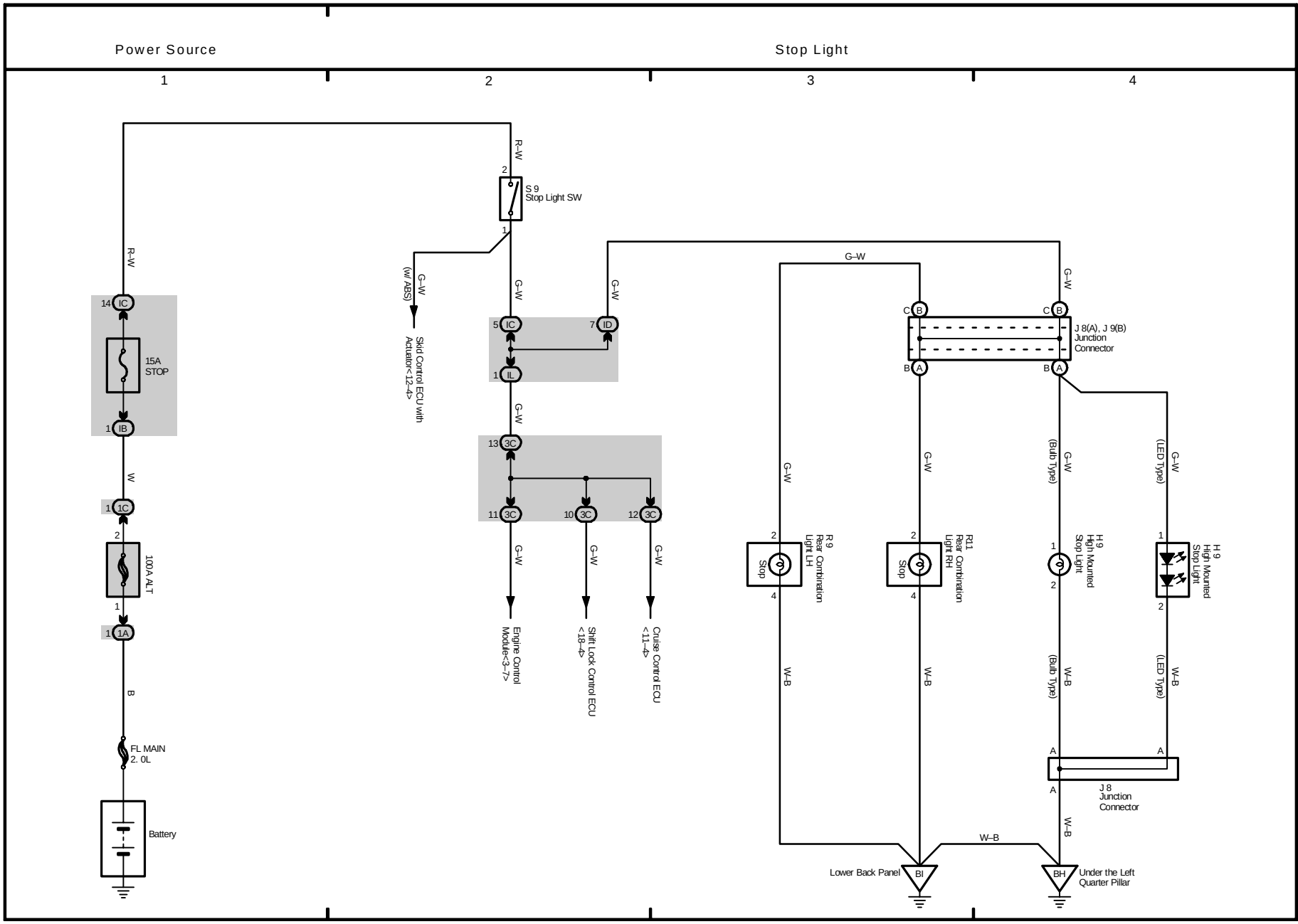
Power Source
Stop Light
1
2
3
4
R–W
2
S 9
Stop Light SW
1
G–W
(w/ ABS)
Skid Control ECU with Actuator<12–4>
G–W
G–W
14 IC
15A
STOP
1 IB
W
1 1C
2
100A ALT
1
1 1A
B
FL MAIN
2. 0L
Battery
5 IC
7 ID
1 IL
G–W
13 3C
11 3C
10 3C
12 3C
G–W
G–W
G–W
Engine Control Module<3–7>
Shift Lock Control ECU <18–4>
Cruise Control ECU <11–4>
G–W
C B
B A
J 8(A), J 9(B)
Junction Connector
G–W
G–W
G–W
G–W
(Bulb Type)
G–W
(LED Type)
2
Stop
4
R 9
Rear Combination Light LH
2
Stop
4
R11
Rear Combination Light RH
1
2
H 9
High Mounted Stop Light
1
2
H 9
High Mounted Stop Light
W–B
W–B
(Bulb Type)
W–B
(LED Type)
A
A
A
J 8
Junction Connector
W–B
W–B
Lower Back Panel
BI
BH
Under the Left Quarter Pillar

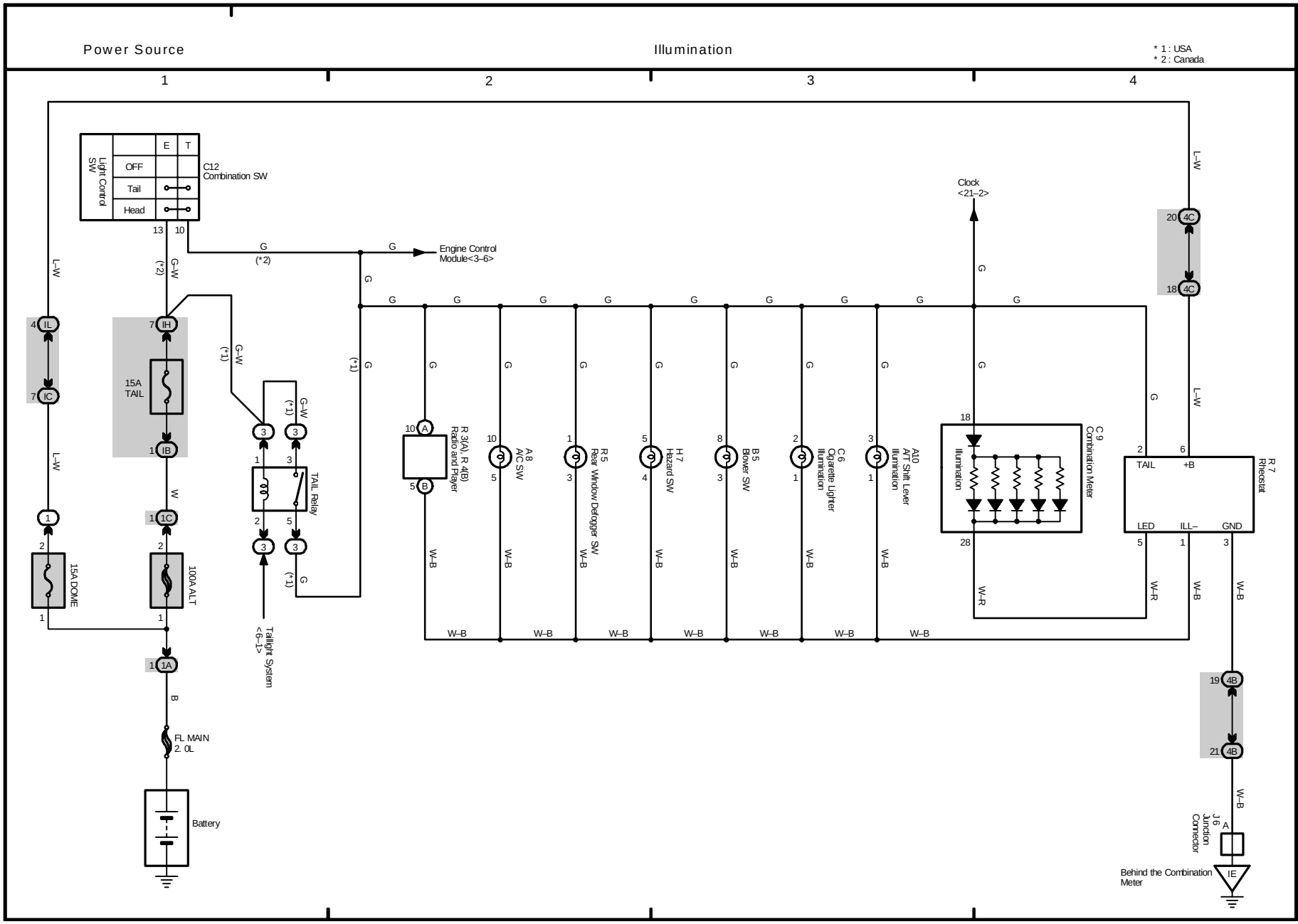
Power Source
Illumination
* 1 : USA
* 2 : Canada
1
2
3
4
Light Control SW
E
T
OFF
Tail
Head
C12
Combination SW
13
10
G
(*2)
Engine Control Module<3–6>
L–W
G–W
(*2)
4 IL
7 IC
7 IH
1 IB
15A TAIL
G–W
(*1)
3
1
3
TAIL Relay
2
5
3
3
G–W
(*1)
G
(*1)
Taillight System <6–1>
1
2
15A DOME
1
1 1C
2
100A ALT
1
1 1A
B
FL MAIN
2. 0L
Battery
10 A
5 B
R 3(A), R 4(B)
Radio and Player
A 8
A/C SW
10
5
R 5
Rear Window Defogger SW
1
3
H 7
Hazard SW
5
4
B 5
Blower SW
8
3
C 6
Cigarette Lighter Illumination
2
1
A10
A/T Shift Lever Illumination
3
1
W–B
Clock
<21–2>
18
Illumination
28
C 9
Combination Meter
W–R
20 4C
18 4C
L–W
2
6
TAIL
+B
R 7
Rheostat
LED
ILL–
GND
5
1
3
W–R
W–B
19 4B
21 4B
W–B
J 6
Junction Connector
A
Behind the Combination Meter
IE

M OVERALL ELECTRICAL WIRING DIAGRAM

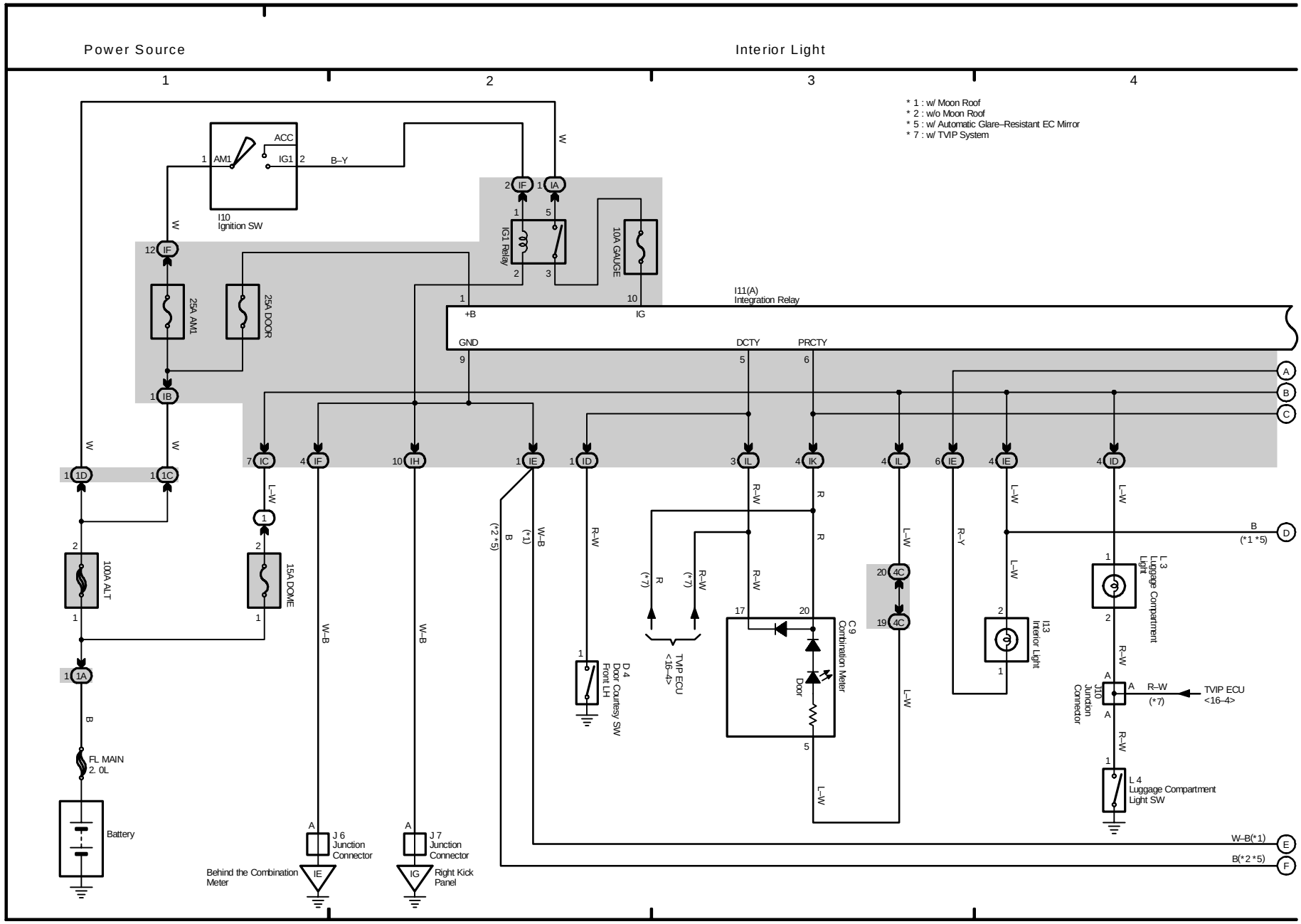
Power Source
Interior Light
1
2
3
4
* 1 : w/ Moon Roof
* 2 : w/o Moon Roof
* 5 : w/ Automatic Glare–Resistant EC Mirror
* 7 : w/ TVIP System
I10
Ignition SW
ACC
AM1
IG1
B–Y
IG1 Relay
10A GAUGE
25A AM1
25A DOOR
I11(A)
Integration Relay
+B
IG
GND
DCTY
PRCTY
100A ALT
15A DOME
FL MAIN
2. 0L
Battery
J 6
Junction
Connector
Behind the Combination
Meter
J 7
Junction
Connector
Right Kick
Panel
D 4
Door Courtesy SW
Front LH
TMP ECU
<16–4>
C 9
Combination Meter
Door
I13
Interior Light
L 3
Luggage Compartment
Light
L 4
Luggage Compartment
Light SW
J10
Junction
Connector
TVIP ECU
<16–4>
W–B(*1)
B(*2 *5)

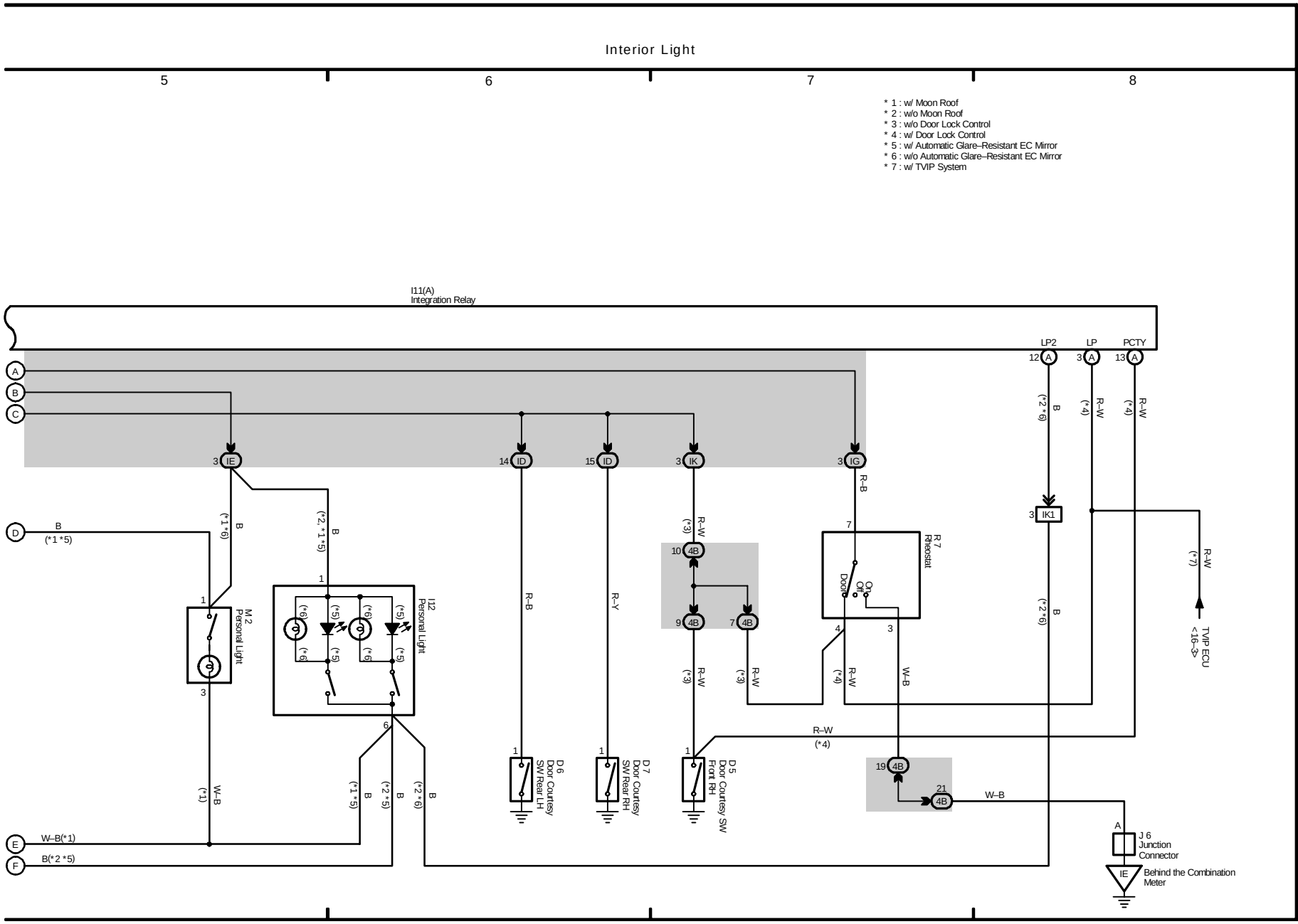
Interior Light
5
6
7
8
* 1 : w/ Moon Roof
* 2 : w/o Moon Roof
* 3 : w/o Door Lock Control
* 4 : w/ Door Lock Control
* 5 : w/ Automatic Glare–Resistant EC Mirror
* 6 : w/o Automatic Glare–Resistant EC Mirror
* 7 : w/ TVIP System
I11(A)
Integration Relay
LP2
LP
PCTY
IE
ID
IK
IG
IK1
M 2
Personal Light
I12
Personal Light
D 6
Door Courtesy
SW Rear LH
D 7
Door Courtesy
SW Rear RH
D 5
Door Courtesy SW
Front RH
R 7
Rheostat
Door
On
Off
J 6
Junction
Connector
Behind the Combination
Meter
TVIP ECU
<16–3>
R–B
R–Y
R–W
W–B
B
W–B(*1)
B(*2 *5)

M OVERALL ELECTRICAL WIRING DIAGRAM

(Cont. next page)

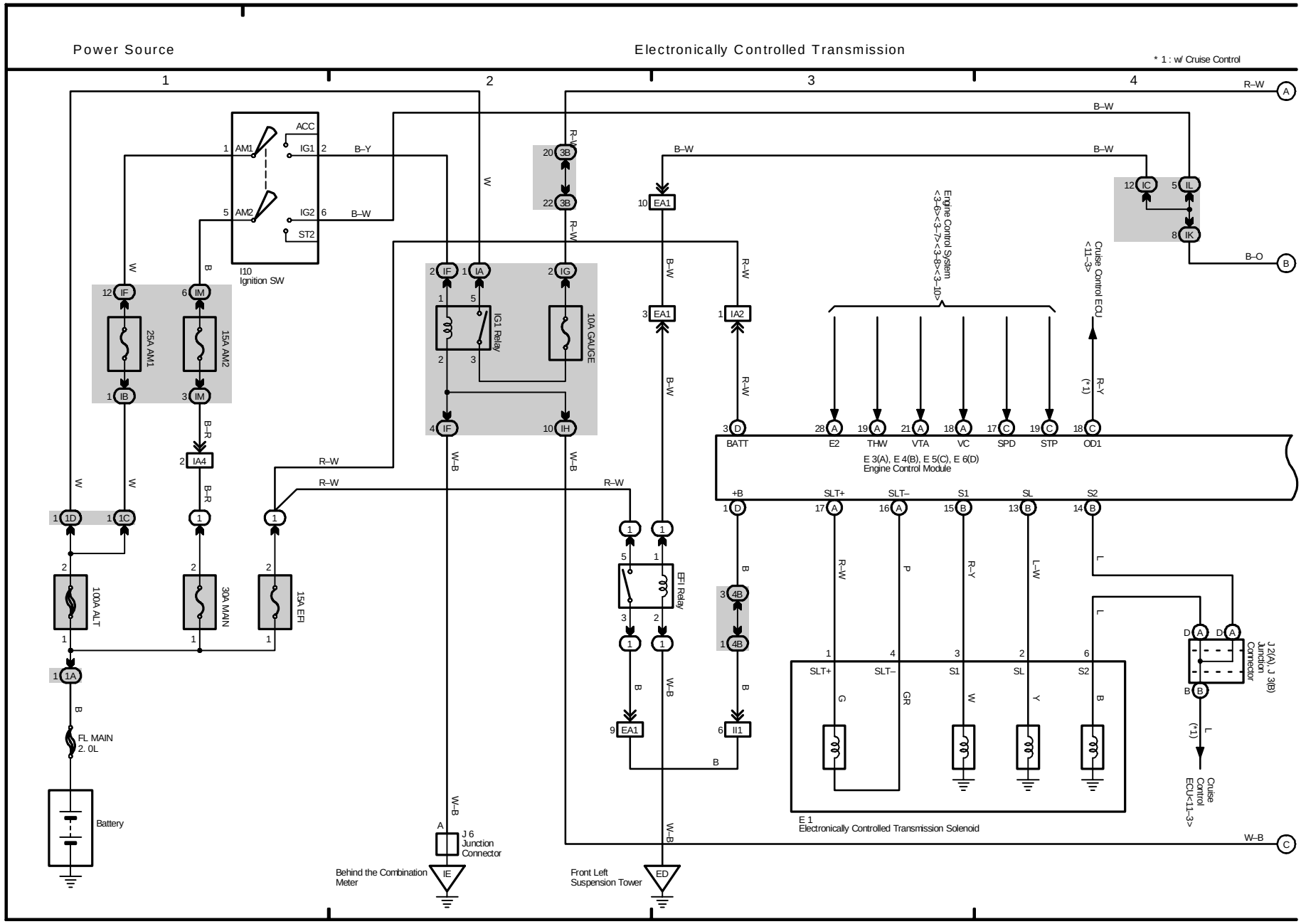

10 COROLLA (Cont' d)

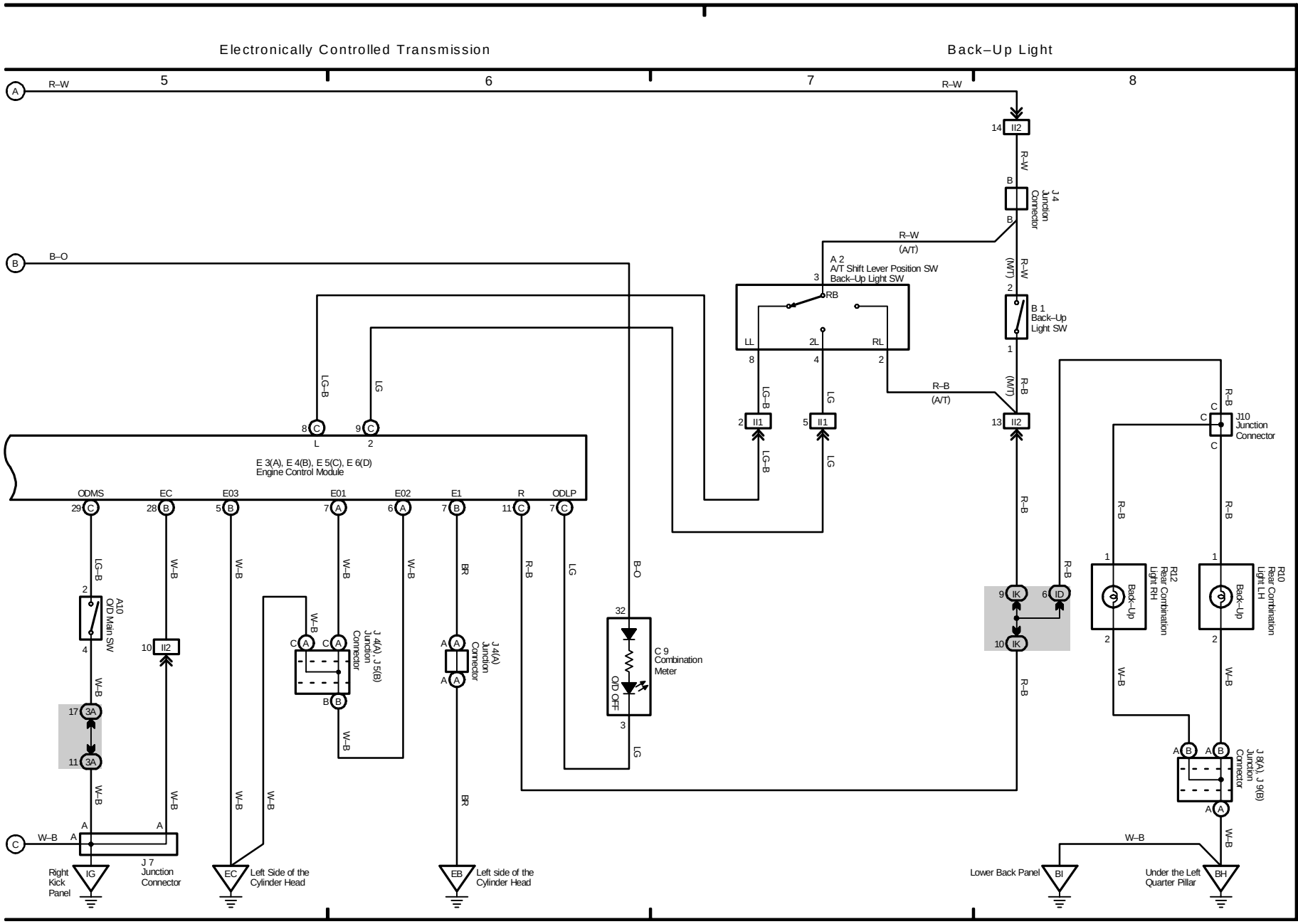

M OVERALL ELECTRICAL WIRING DIAGRAM

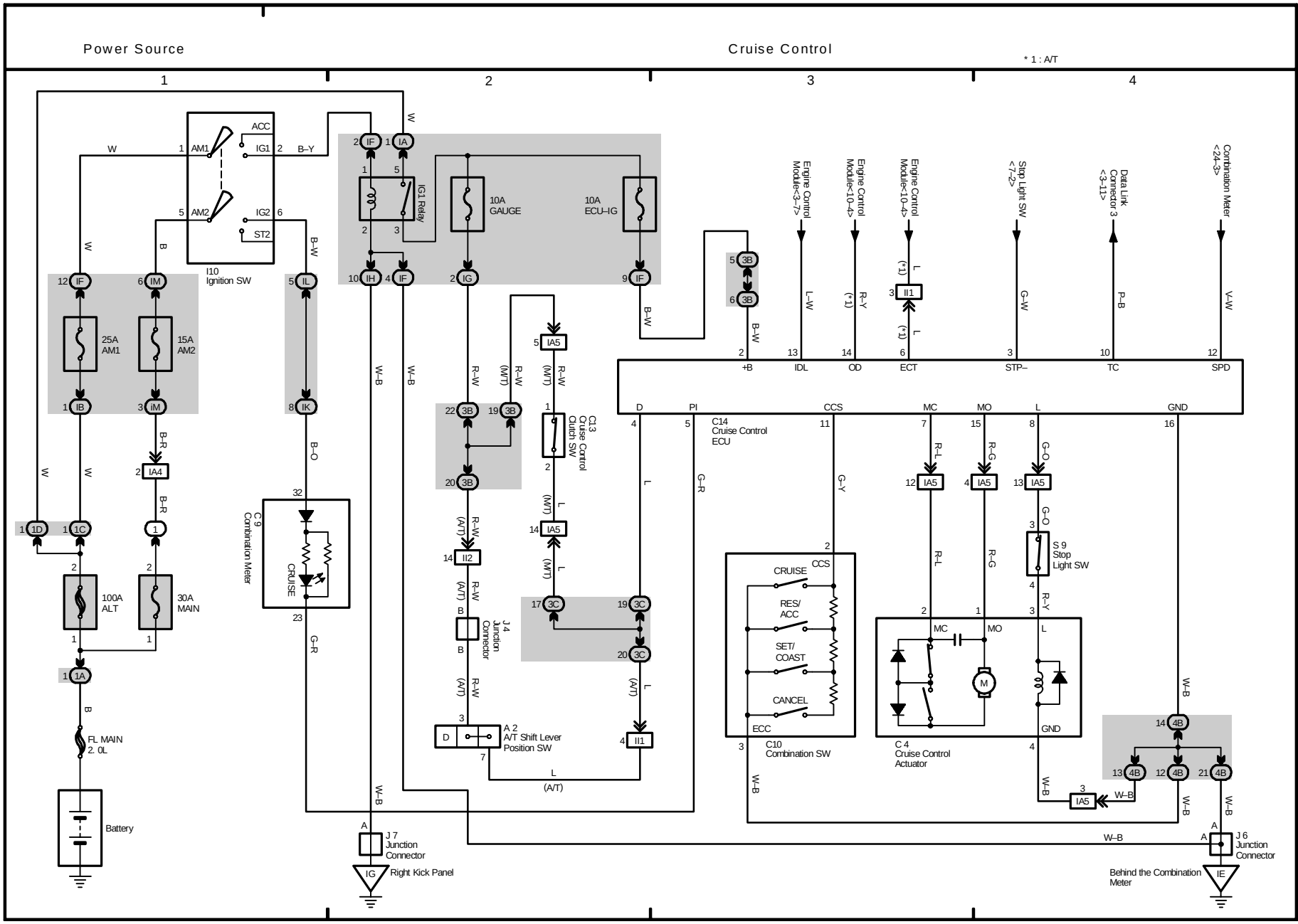
Power Source
Cruise Control
* 1 : A/T
1
2
3
4
ACC
IG1
IG2
ST2
AM1
AM2
I10
Ignition SW
IG1 Relay
25A
AM1
15A
AM2
100A
ALT
30A
MAIN
FL MAIN
2. 0L
Battery
10A
GAUGE
10A
ECU–IG
C9
Combination Meter
CRUISE
J 7
Junction
Connector
Right Kick Panel
J4
Junction
Connector
A 2
A/T Shift Lever
Position SW
C13
Cruise Control
Clutch SW
Engine Control
Module<3–7>
Engine Control
Module<10–4>
Engine Control
Module<10–4>
Stop Light SW
<7–2>
Data Link
Connector 3
<3–11>
Combination Meter
<24–3>
+B
IDL
OD
ECT
STP–
TC
SPD
C14
Cruise Control
ECU
D
PI
CCS
MC
MO
L
GND
CRUISE
RES/
ACC
SET/
COAST
CANCEL
ECC
C10
Combination SW
C 4
Cruise Control
Actuator
S 9
Stop
Light SW
J 6
Junction
Connector
Behind the Combination
Meter
IE
IG

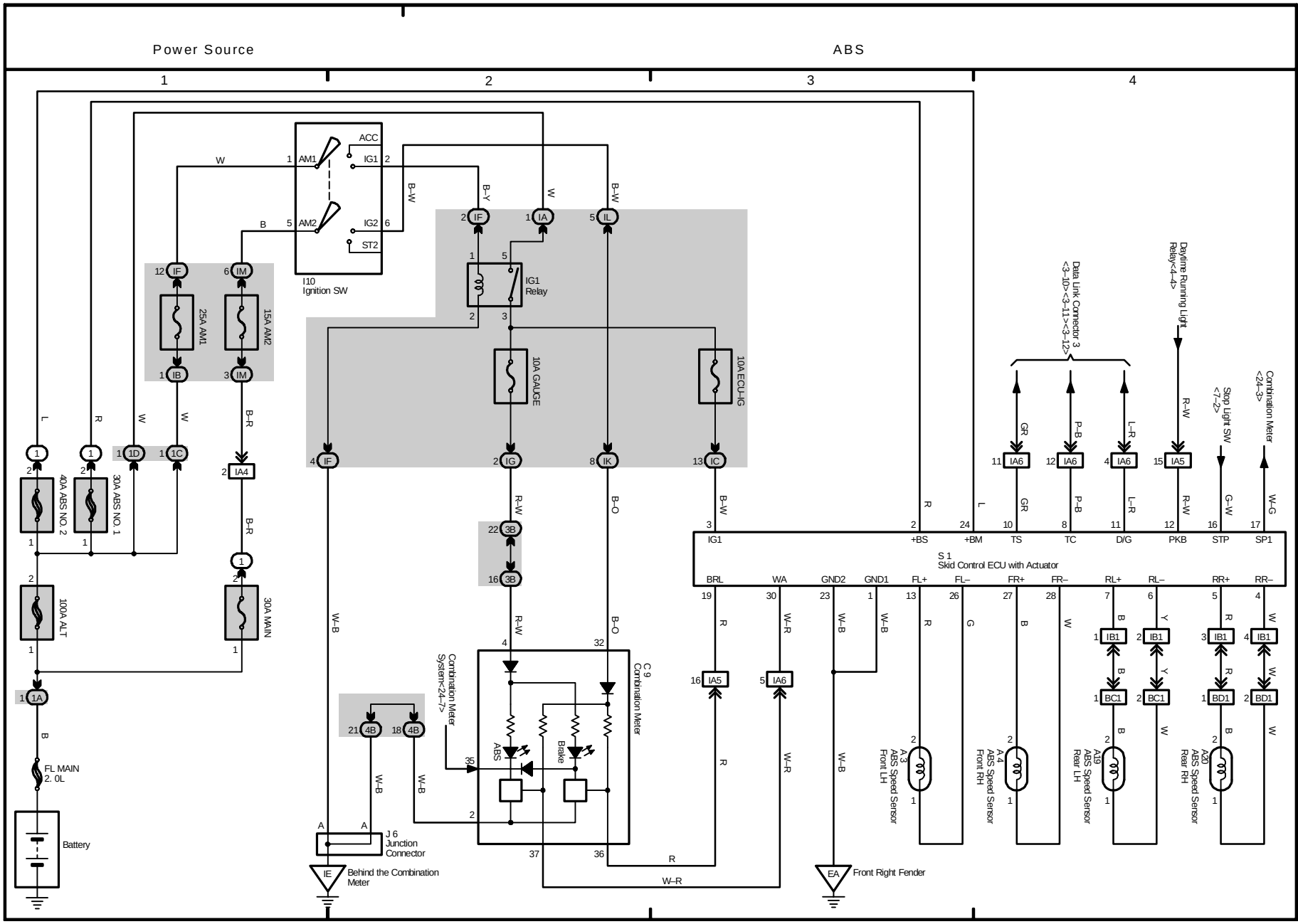
Power Source
ABS
1
2
3
4
ACC
IG1
IG2
ST2
AM1
AM2
I10
Ignition SW
IG1 Relay
25A AM1
15A AM2
10A GAUGE
10A ECU-IG
40A ABS NO. 2
30A ABS NO. 1
100A ALT
30A MAIN
FL MAIN
2. 0L
Battery
J 6
Junction
Connector
Behind the Combination
Meter
Combination Meter
System<24-7>
C 9
Combination Meter
ABS
Brake
Data Link Connector 3
<3-10><3-11><3-12>
Daytime Running Light
Relay<4-4>
Stop Light SW
<7-2>
Combination Meter
<24-3>
S 1
Skid Control ECU with Actuator
IG1
+BS
+BM
TS
TC
D/G
PKB
STP
SP1
BRL
WA
GND2
GND1
FL+
FL–
FR+
FR–
RL+
RL–
RR+
RR–
A 3
ABS Speed Sensor
Front LH
A 4
ABS Speed Sensor
Front RH
A19
ABS Speed Sensor
Rear LH
A20
ABS Speed Sensor
Rear RH
Front Right Fender

M OVERALL ELECTRICAL WIRING DIAGRAM

(Cont. next page)

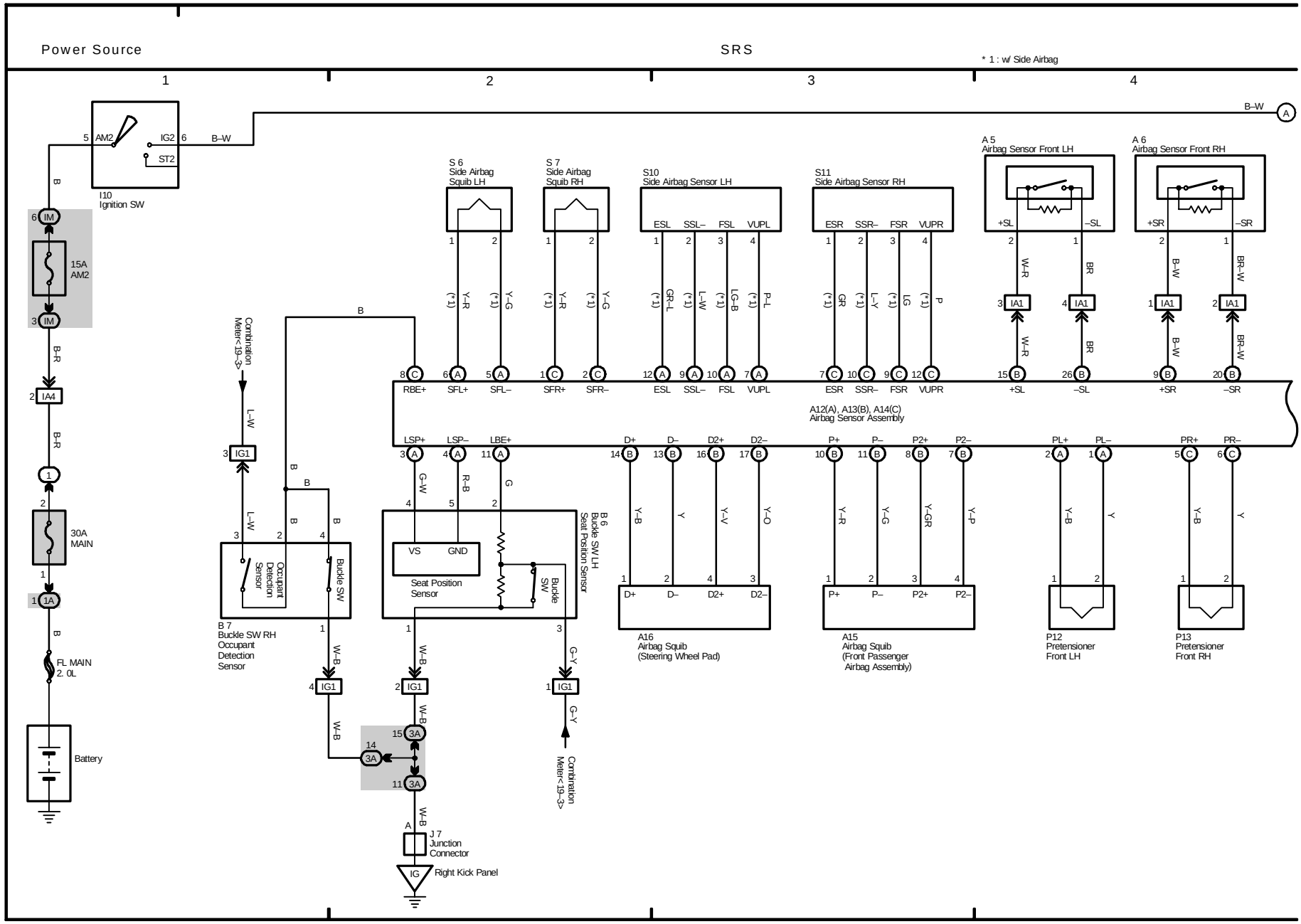

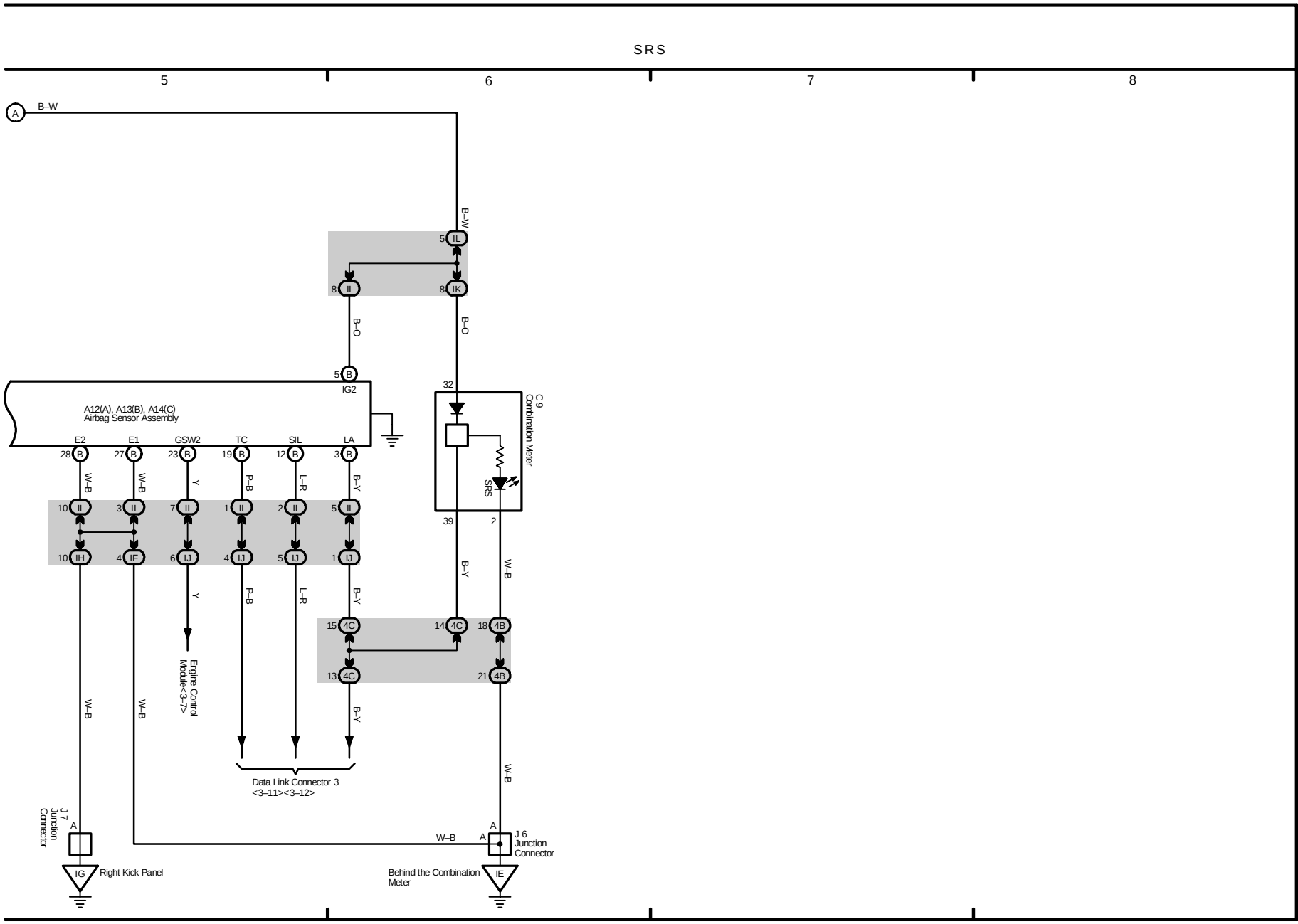
SRS
5
6
7
8
A
B–W
B–W
5 IL
8 II
8 IK
B–O
B–O
5 B
IG2
32
C 9
Combination Meter
A12(A), A13(B), A14(C)
Airbag Sensor Assembly
E2
E1
GSW2
TC
SIL
LA
28 B
27 B
23 B
19 B
12 B
3 B
W–B
W–B
Y
P–B
L–R
B–Y
SRS
10 II
3 II
7 II
1 II
2 II
5 II
39
2
10 IH
4 IF
6 IJ
4 IJ
5 IJ
1 IJ
B–Y
W–B
Y
P–B
L–R
B–Y
15 4C
14 4C
18 4B
13 4C
21 4B
Engine Control
Module<3–7>
W–B
W–B
B–Y
W–B
Data Link Connector 3
<3–11><3–12>
J 7
Junction
Connector
A
A
W–B
A
J 6
Junction
Connector
IG
Right Kick Panel
Behind the Combination
Meter
IE

M OVERALL ELECTRICAL WIRING DIAGRAM

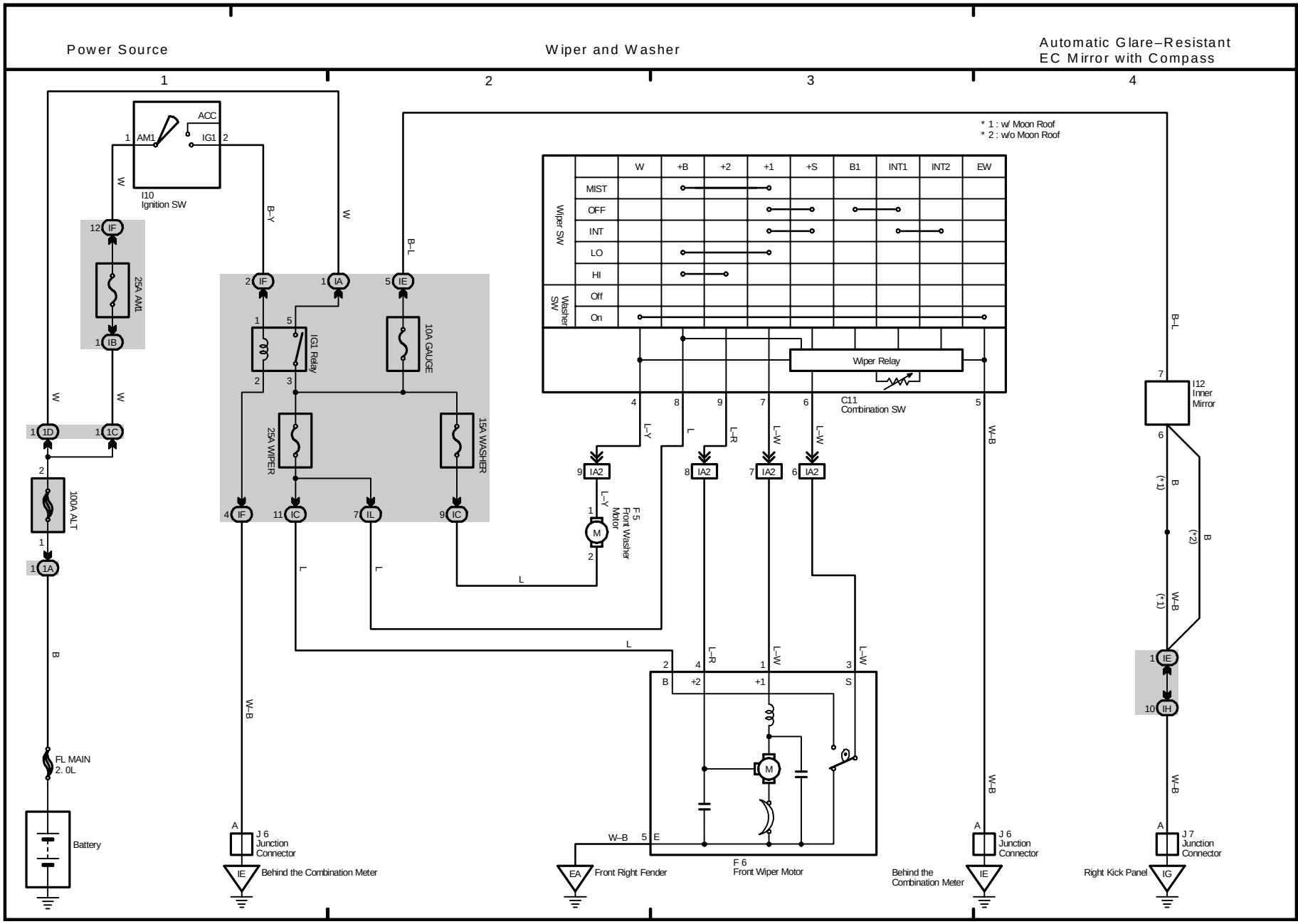
Power Source
Wiper and Washer
Automatic Glare–Resistant
EC Mirror with Compass
1
2
3
4
* 1 : w/ Moon Roof
* 2 : w/o Moon Roof
ACC
AM1
IG1
I10
Ignition SW
25A AM1
IG1 Relay
10A GAUGE
25A WIPER
15A WASHER
100A ALT
FL MAIN
2. 0L
Battery
J 6
Junction
Connector
Behind the Combination Meter
Wiper SW
Washer SW
MIST
OFF
INT
LO
HI
Off
On
W
+B
+2
+1
+S
B1
INT1
INT2
EW
Wiper Relay
C11
Combination SW
F 5
Front Washer
Motor
F 6
Front Wiper Motor
Front Right Fender
Behind the
Combination Meter
I12
Inner
Mirror
J 7
Junction
Connector
Right Kick Panel

M OVERALL ELECTRICAL WIRING DIAGRAM

(Cont. next page)

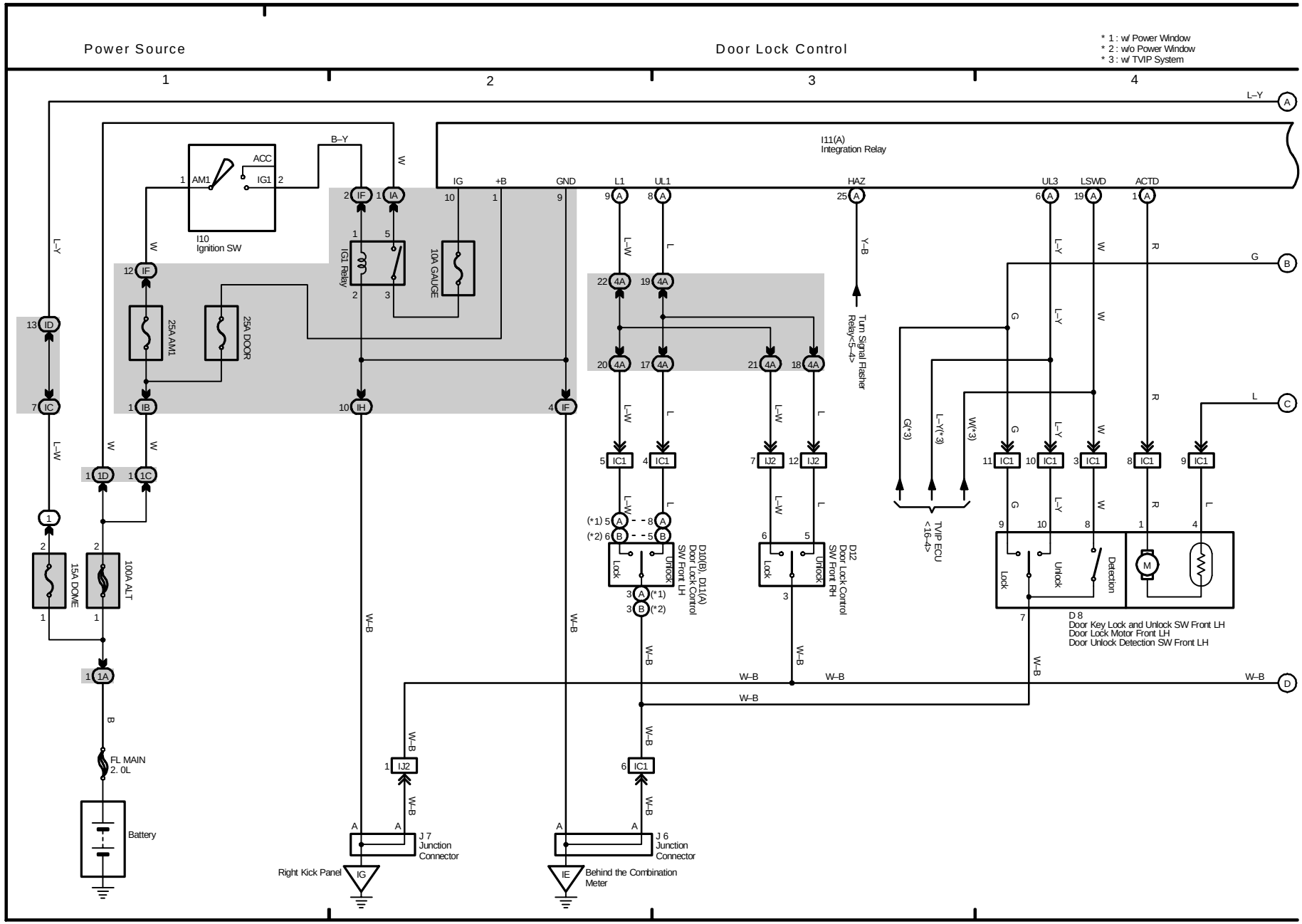

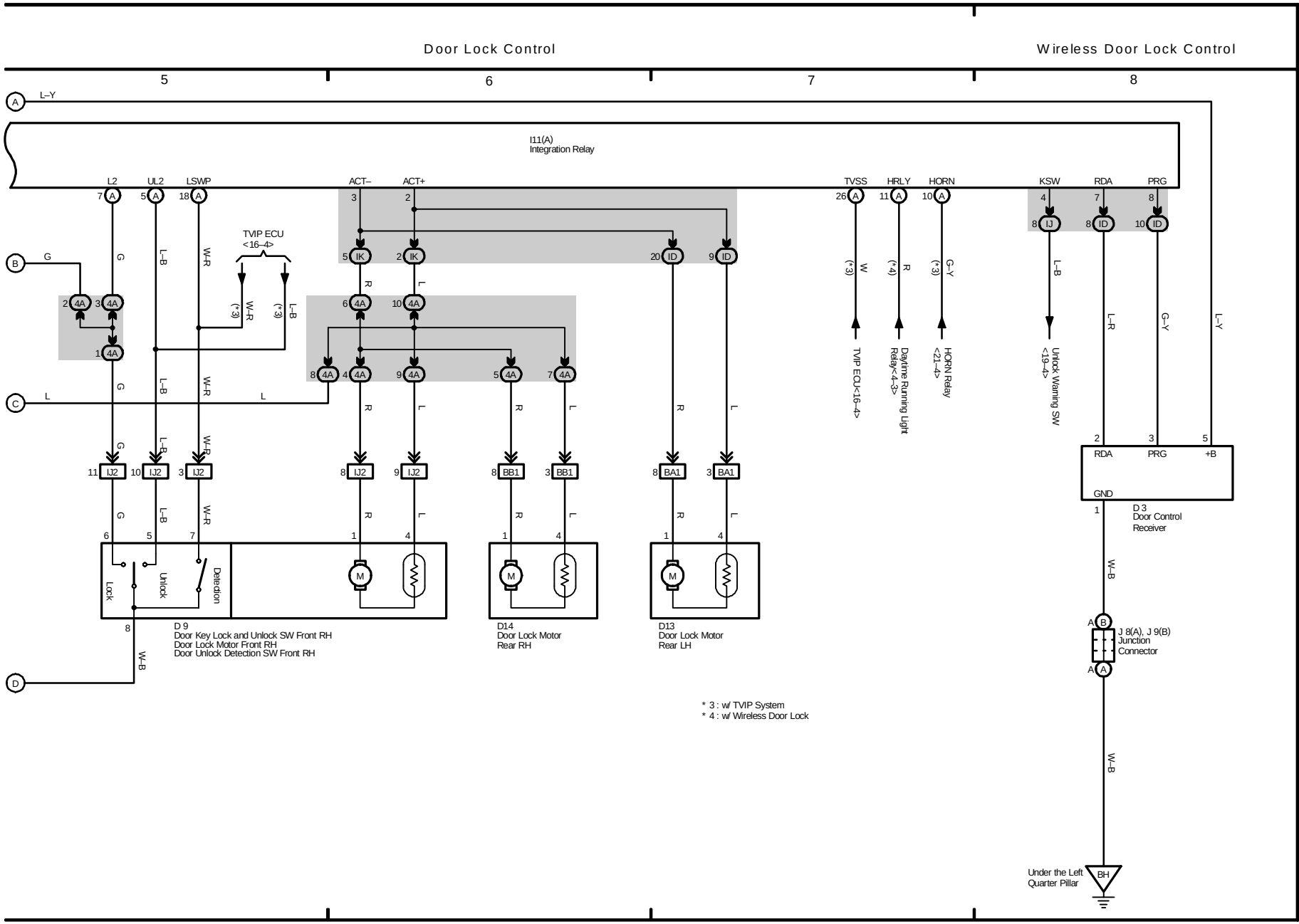
Door Lock Control
Wireless Door Lock Control
5
6
7
8
L–Y
I11(A)
Integration Relay
L2
UL2
LSWP
ACT–
ACT+
TVSS
HRLY
HORN
KSW
RDA
PRG
TVIP ECU
<16–4>
W–R
L–B
G
L
R
W
G–Y
L–R
TVIP ECU<16–4>
Daytime Running Light Relay<4–3>
HORN Relay <21–4>
Unlock Warning SW <19–4>
RDA
PRG
+B
GND
D 3
Door Control Receiver
Lock
Unlock
Detection
D 9
Door Key Lock and Unlock SW Front RH
Door Lock Motor Front RH
Door Unlock Detection SW Front RH
D14
Door Lock Motor Rear RH
D13
Door Lock Motor Rear LH
J 8(A), J 9(B)
Junction Connector
Under the Left Quarter Pillar
BH
* 3 : w/ TVIP System
* 4 : w/ Wireless Door Lock

M OVERALL ELECTRICAL WIRING DIAGRAM

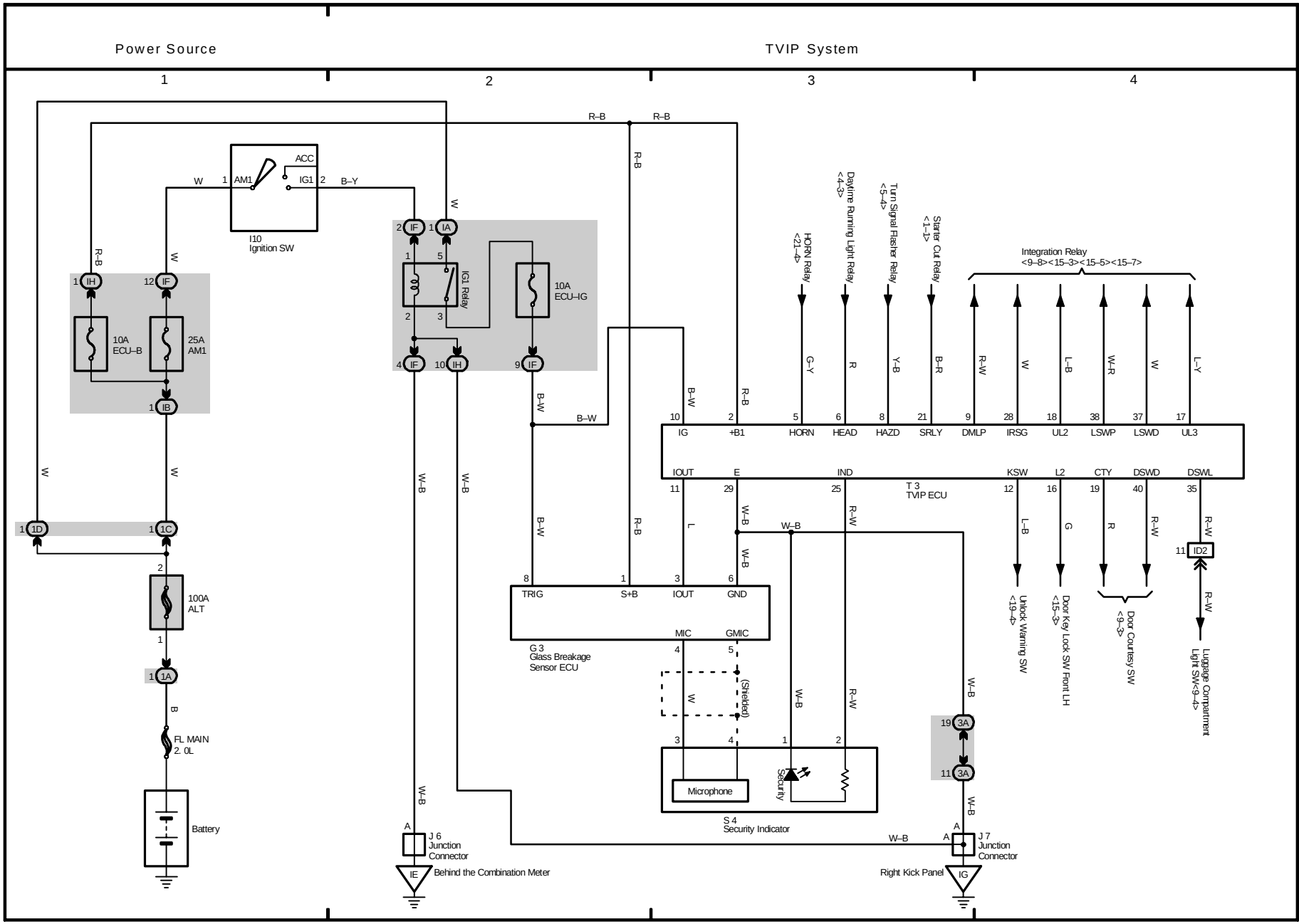
Power Source
TVIP System
1
2
3
4
ACC
IG1
AM1
I10
Ignition SW
IG1 Relay
10A
ECU–IG
10A
ECU–B
25A
AM1
100A
ALT
FL MAIN
2. 0L
Battery
HORN Relay
<21–4>
Daytime Running Light Relay
<4–3>
Turn Signal Flasher Relay
<5–4>
Starter Cut Relay
<1–1>
Integration Relay
<9–8><15–3><15–5><15–7>
IG
+B1
HORN
HEAD
HAZD
SRLY
DMLP
IRSG
UL2
LSWP
LSWD
UL3
IOUT
E
IND
KSW
L2
CTY
DSWD
DSWL
T 3
TVIP ECU
TRIG
S+B
IOUT
GND
G 3
Glass Breakage
Sensor ECU
MIC
GMIC
(Shielded)
Microphone
Security
S 4
Security Indicator
J 6
Junction
Connector
Behind the Combination Meter
J 7
Junction
Connector
Right Kick Panel
Unlock Warning SW
<19–4>
Door Key Lock SW Front LH
<15–3>
Door Courtesy SW
<9–3>
Luggage Compartment
Light SW<9–4>
R–B
W
B–Y
B–W
W–B
R–W
G–Y
R
Y–B
B–R
R–W
W
L–B
W–R
L–Y
L
G
B

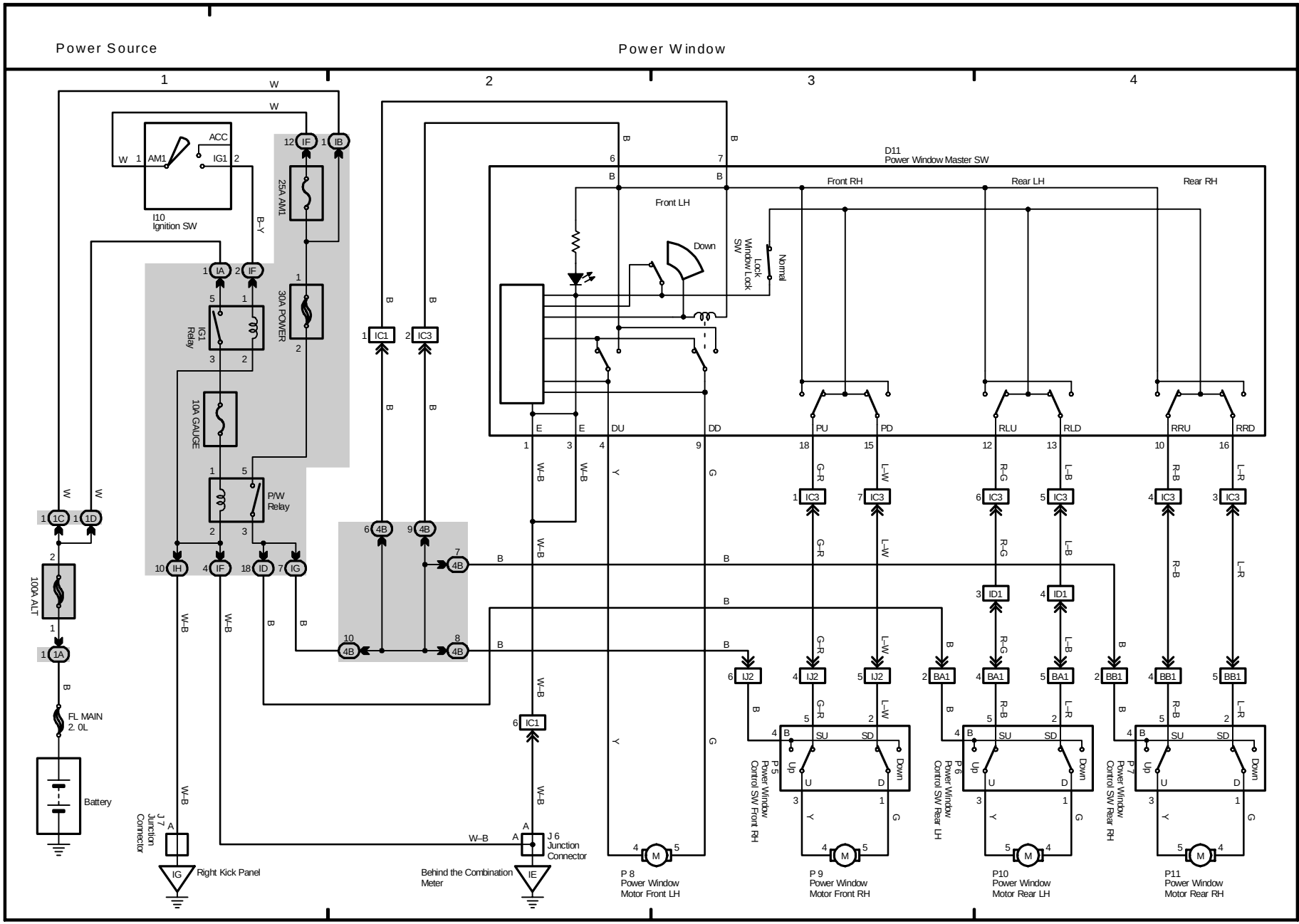
Power Source
Power Window
1
2
3
4
W
ACC
AM1
IG1
I10
Ignition SW
12 IF
1 IB
25A AM1
B–Y
1 IA
2 IF
IG1
Relay
30A POWER
10A GAUGE
P/W
Relay
100A ALT
1 1C
1 1D
1 1A
FL MAIN
2. 0L
Battery
10 IH
4 IF
18 ID
7 IG
W–B
B
J 7
Junction
Connector
IG
Right Kick Panel
1 IC1
2 IC3
6 4B
9 4B
7 4B
10 4B
8 4B
J 6
Junction
Connector
Behind the Combination
Meter
IE
D11
Power Window Master SW
Front RH
Rear LH
Rear RH
Front LH
Down
Window Lock
SW
Lock
Normal
E
DU
DD
PU
PD
RLU
RLD
RRU
RRD
W–B
G–R
L–W
R–G
L–B
R–B
L–R
Y
G
IJ2
BA1
BB1
ID1
SU
SD
Up
Down
U
D
M
P 8
Power Window
Motor Front LH
P 9
Power Window
Motor Front RH
P10
Power Window
Motor Rear LH
P11
Power Window
Motor Rear RH
P 5
Power Window
Control SW Front RH
P 6
Power Window
Control SW Rear LH
P 7
Power Window
Control SW Rear RH

M OVERALL ELECTRICAL WIRING DIAGRAM

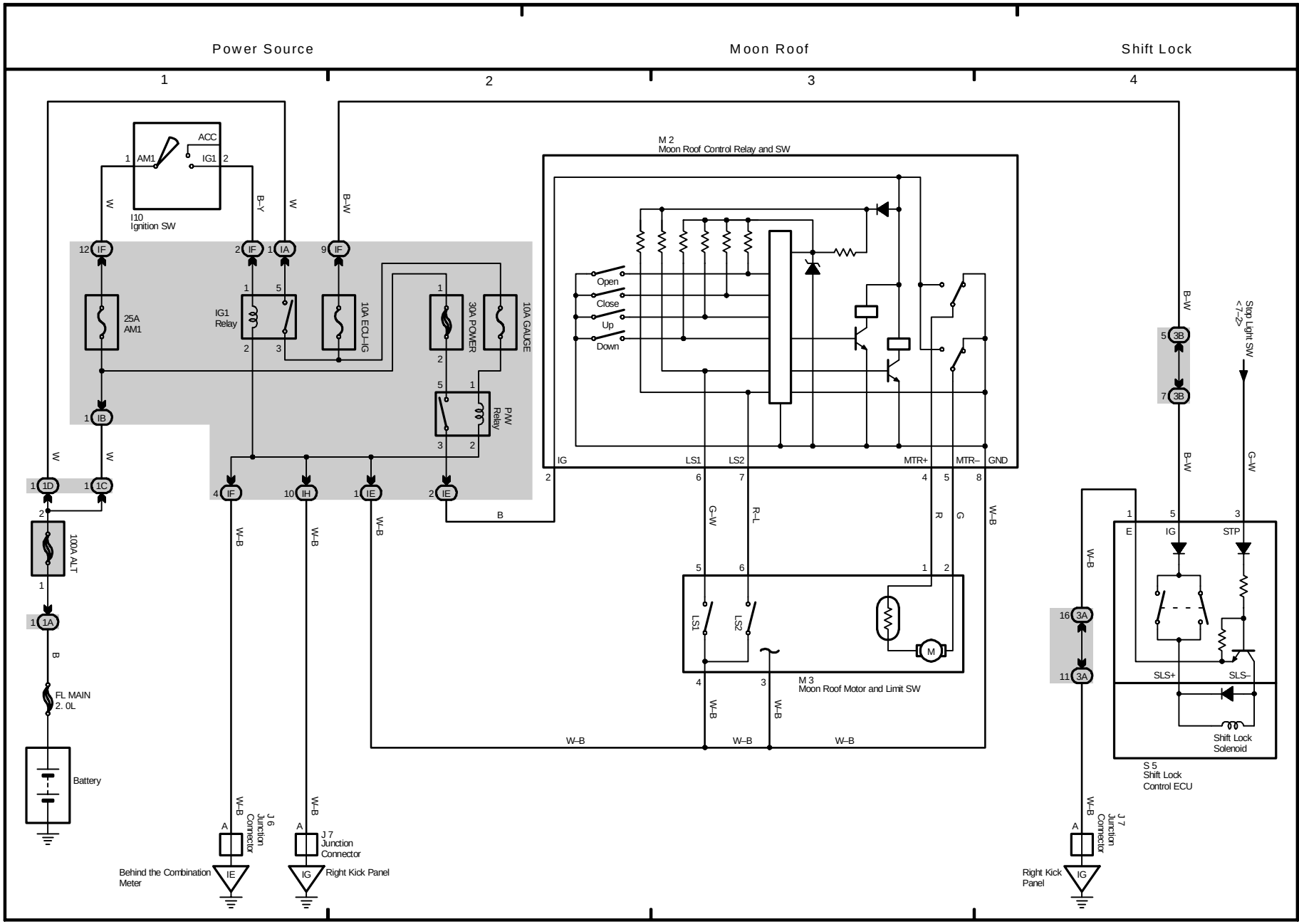
Power Source
Moon Roof
Shift Lock
1
2
3
4
I10
Ignition SW
ACC
AM1
IG1
25A
AM1
IG1
Relay
10A ECU–IG
30A POWER
10A GAUGE
P/W
Relay
100A ALT
FL MAIN
2. 0L
Battery
M 2
Moon Roof Control Relay and SW
Open
Close
Up
Down
IG
LS1
LS2
MTR+
MTR–
GND
M 3
Moon Roof Motor and Limit SW
M
Stop Light SW
<7–2>
E
IG
STP
SLS+
SLS–
Shift Lock
Solenoid
S 5
Shift Lock
Control ECU
J 6
Junction
Connector
Behind the Combination
Meter
J 7
Junction
Connector
Right Kick Panel
J 7
Junction
Connector
Right Kick
Panel
W
B–Y
B–W
B
W–B
G–W
R–L
R
G

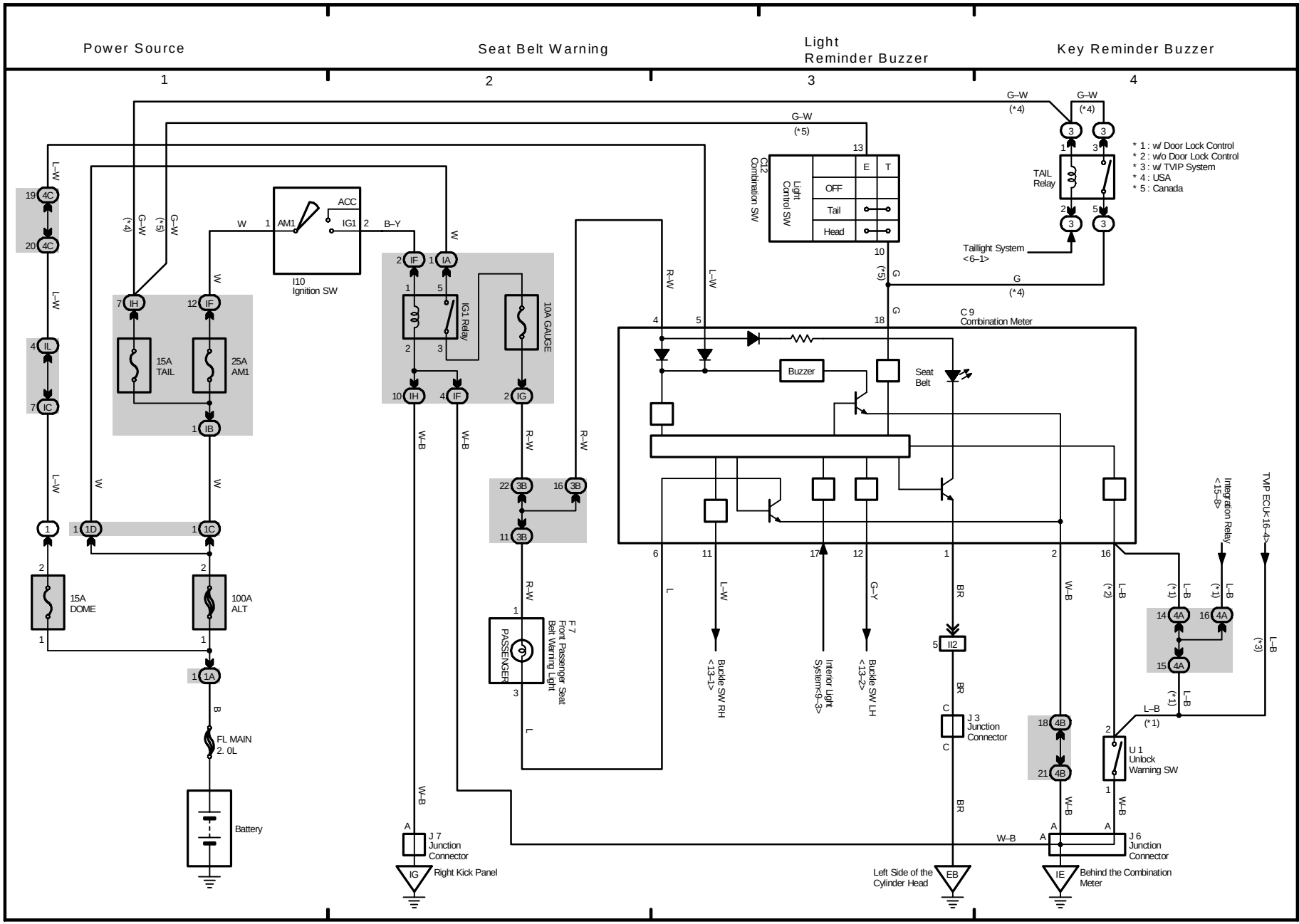
Power Source
Seat Belt Warning
Light
Reminder Buzzer
Key Reminder Buzzer
1
2
3
4
* 1 : w/ Door Lock Control
* 2 : w/o Door Lock Control
* 3 : w/ TVIP System
* 4 : USA
* 5 : Canada
I10
Ignition SW
ACC
IG1
AM1
IG1 Relay
10A GAUGE
15A
TAIL
25A
AM1
15A
DOME
100A
ALT
FL MAIN
2. 0L
Battery
C12
Combination SW
Light
Control SW
OFF
Tail
Head
TAIL
Relay
Taillight System
<6–1>
C 9
Combination Meter
Buzzer
Seat
Belt
F 7
Front Passenger Seat
Belt Warning Light
PASSENGER
Buckle SW RH
<13–1>
Interior Light
System<9–3>
Buckle SW LH
<13–2>
J 3
Junction
Connector
J 7
Junction
Connector
J 6
Junction
Connector
U 1
Unlock
Warning SW
Integration Relay
<15–8>
TVIP ECU<16–4>
Right Kick Panel
Left Side of the
Cylinder Head
Behind the Combination
Meter

M OVERALL ELECTRICAL WIRING DIAGRAM

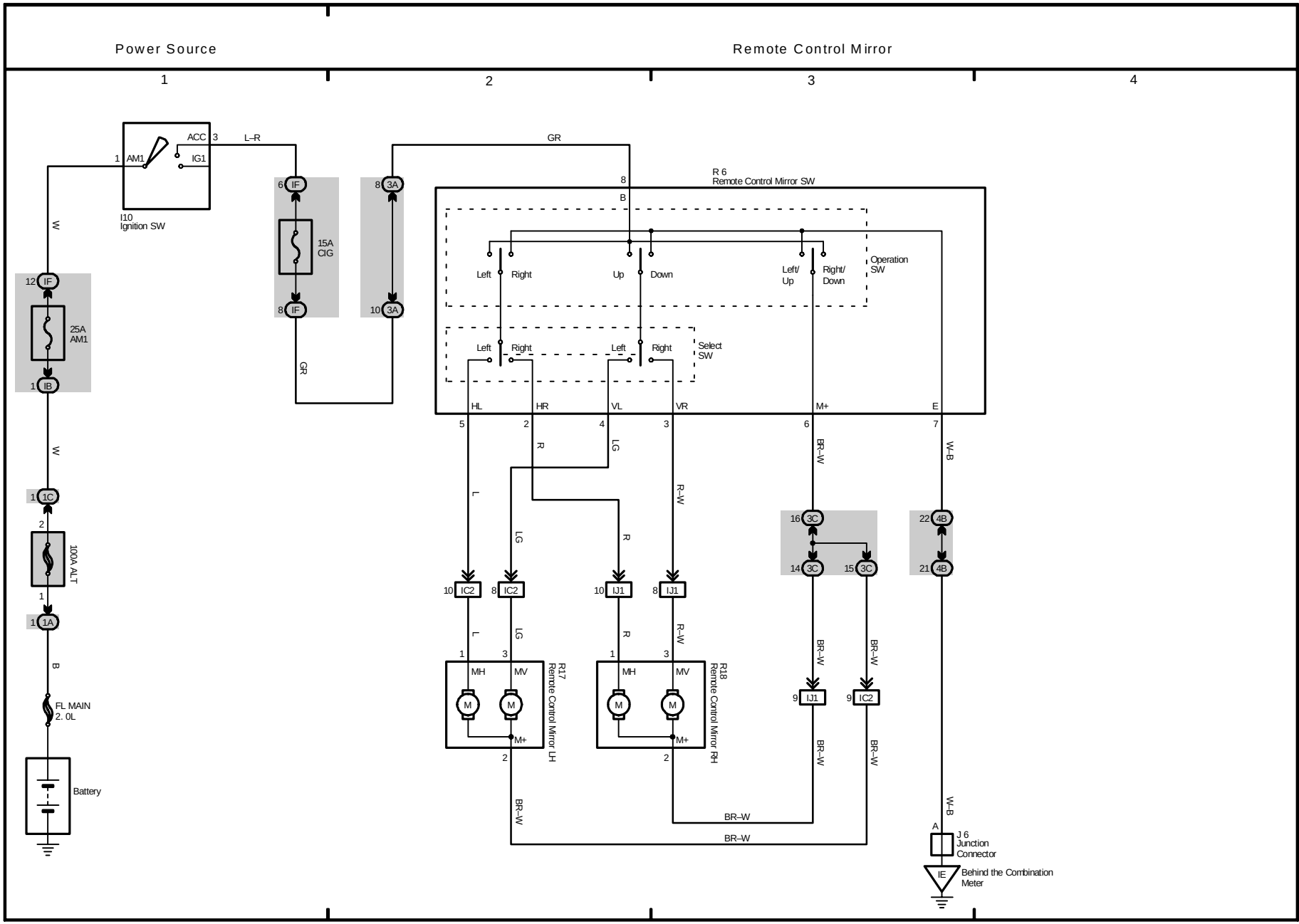
Power Source
Remote Control Mirror
1
2
3
4
ACC
AM1
IG1
L–R
I10
Ignition SW
W
12 IF
25A
AM1
1 IB
W
1 1C
2
100A ALT
1
1 1A
B
FL MAIN
2. 0L
Battery
6 IF
15A
CIG
8 IF
GR
8 3A
10 3A
GR
8
B
R 6
Remote Control Mirror SW
Left
Right
Up
Down
Left/
Up
Right/
Down
Operation
SW
Left
Right
Left
Right
Select
SW
HL
HR
VL
VR
M+
E
5
2
4
3
6
7
R
LG
L
LG
R
R–W
BR–W
W–B
10 IC2
8 IC2
10 IJ1
8 IJ1
16 3C
14 3C
15 3C
22 4B
21 4B
1
3
MH
MV
M
M+
2
R17
Remote Control Mirror LH
R18
Remote Control Mirror RH
9 IJ1
9 IC2
BR–W
BR–W
BR–W
BR–W
BR–W
BR–W
W–B
A
J 6
Junction
Connector
IE
Behind the Combination
Meter

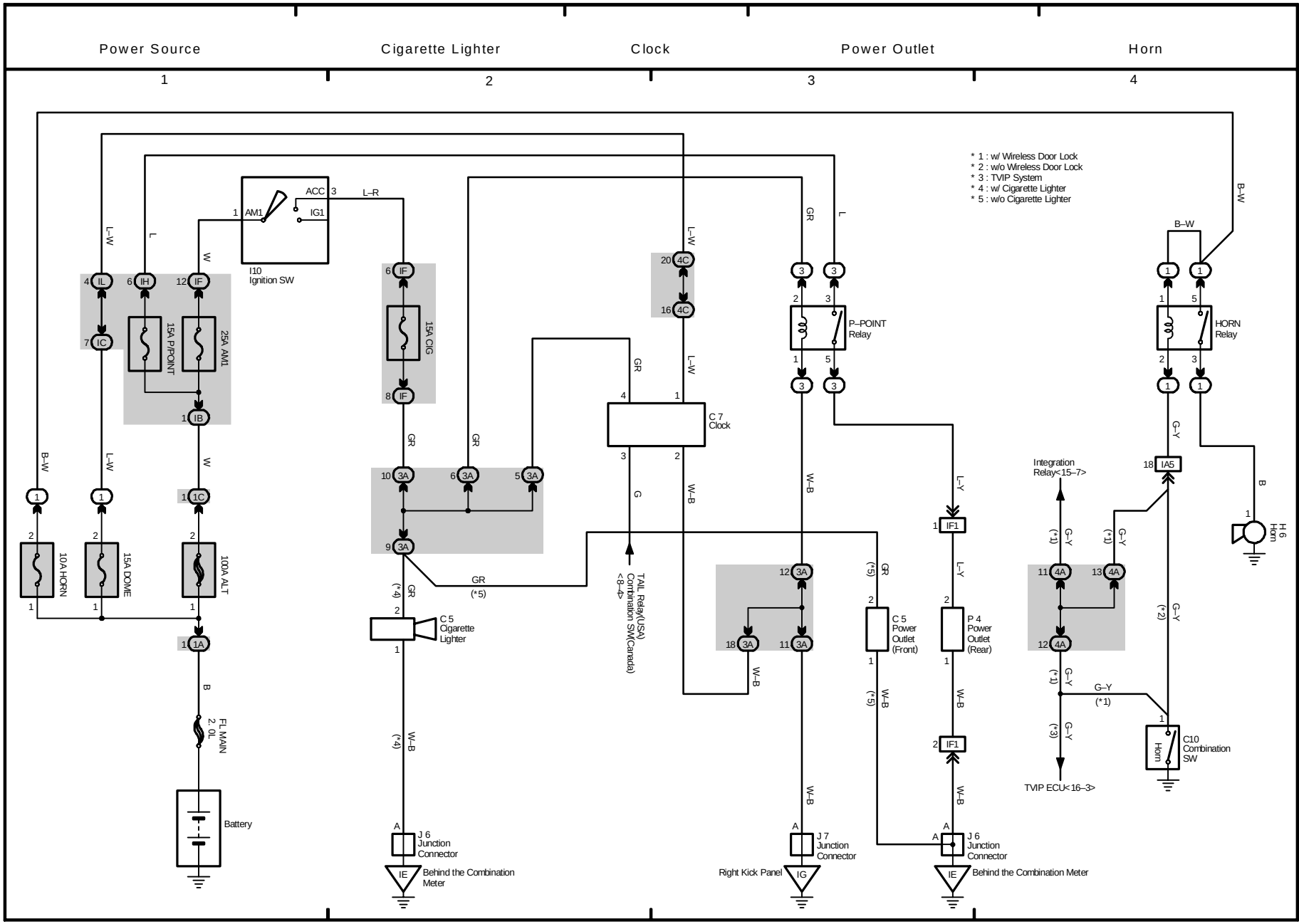
Power Source
Cigarette Lighter
Clock
Power Outlet
Horn
1
2
3
4
* 1 : w/ Wireless Door Lock
* 2 : w/o Wireless Door Lock
* 3 : TVIP System
* 4 : w/ Cigarette Lighter
* 5 : w/o Cigarette Lighter
I10 Ignition SW
ACC
IG1
AM1
15A P/POINT
25A AM1
15A CIG
C 7 Clock
P–POINT Relay
HORN Relay
10A HORN
15A DOME
100A ALT
FL MAIN 2.0L
Battery
C 5 Cigarette Lighter
TAIL Relay(USA) Combination SW(Canada) <8–4>
C 5 Power Outlet (Front)
P 4 Power Outlet (Rear)
Integration Relay<15–7>
TVIP ECU<16–3>
H 6 Horn
C10 Combination SW
J 6 Junction Connector
Behind the Combination Meter
J 7 Junction Connector
Right Kick Panel
J 6 Junction Connector
Behind the Combination Meter

M OVERALL ELECTRICAL WIRING DIAGRAM

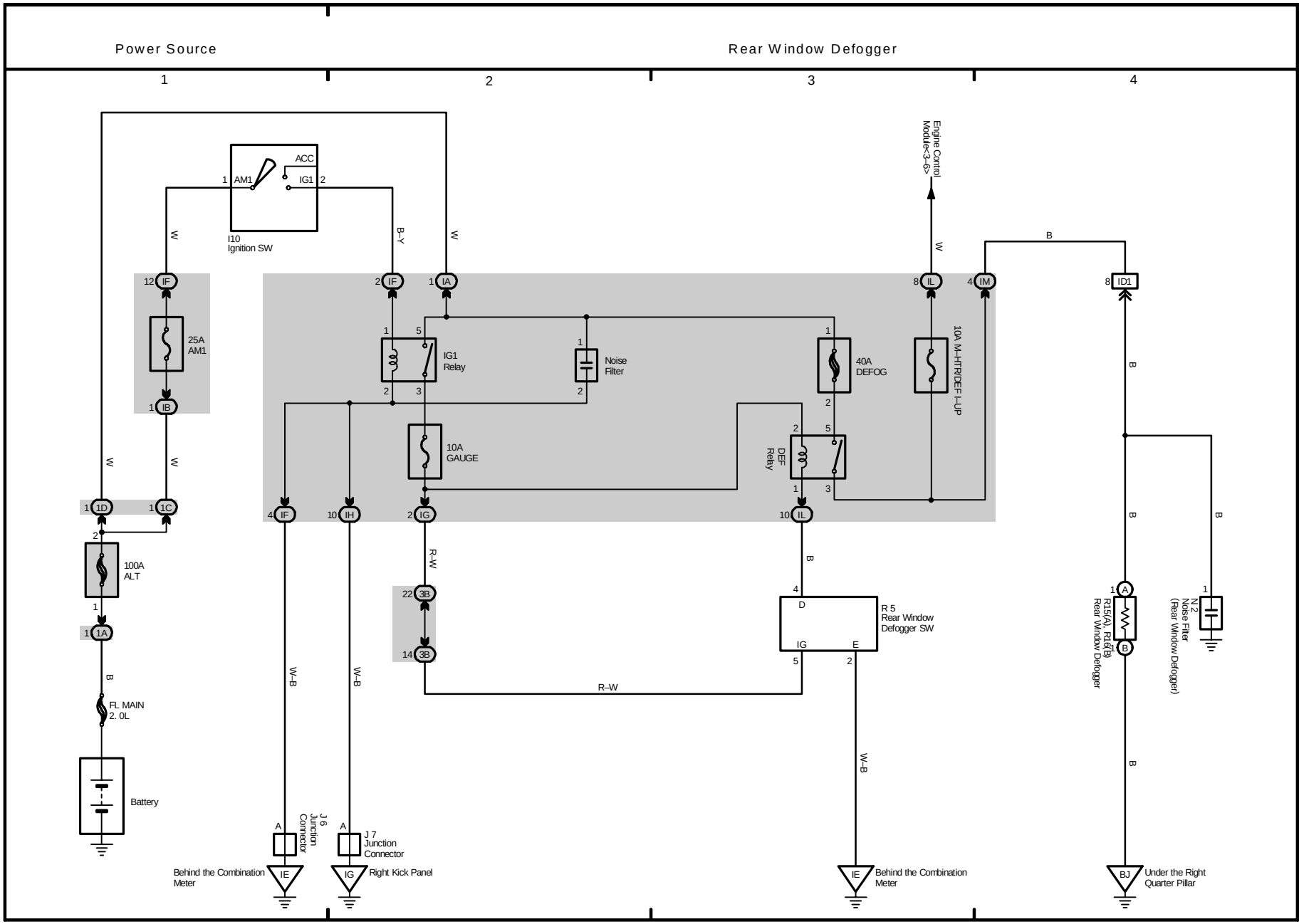
Power Source
Rear Window Defogger
1
2
3
4
ACC
AM1
IG1
I10
Ignition SW
25A
AM1
100A
ALT
FL MAIN
2. 0L
Battery
IG1
Relay
Noise
Filter
10A
GAUGE
40A
DEFOG
DEF
Relay
10A M-HTR/DEF I-UP
Engine Control
Module<3-6>
R 5
Rear Window
Defogger SW
R15(A), R16(B)
Rear Window Defogger
N12
Noise Filter
(Rear Window Defogger)
J 6
Junction
Connector
J 7
Junction
Connector
Behind the Combination
Meter
Right Kick Panel
Behind the Combination
Meter
Under the Right
Quarter Pillar
W
B-Y
B
R-W
W-B

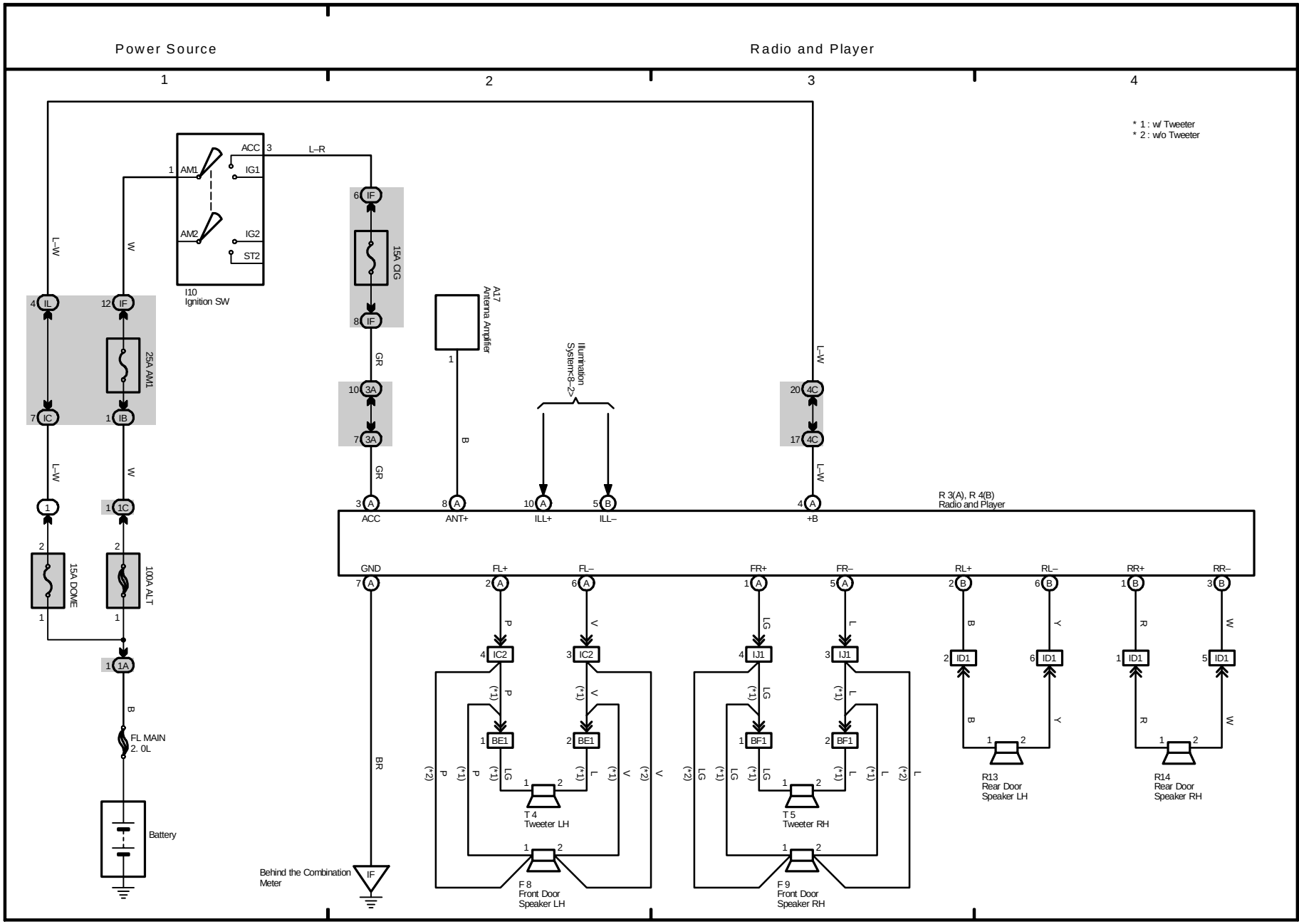
Power Source
Radio and Player
1
2
3
4
* 1 : w/ Tweeter
* 2 : w/o Tweeter
ACC
IG1
IG2
ST2
AM1
AM2
I10
Ignition SW
15A CIG
25A AM1
15A DOME
100A ALT
FL MAIN
2. 0L
Battery
A17
Antenna Amplifier
Illumination
System<8–2>
ACC
ANT+
ILL+
ILL–
+B
R 3(A), R 4(B)
Radio and Player
GND
FL+
FL–
FR+
FR–
RL+
RL–
RR+
RR–
T 4
Tweeter LH
T 5
Tweeter RH
F 8
Front Door
Speaker LH
F 9
Front Door
Speaker RH
R13
Rear Door
Speaker LH
R14
Rear Door
Speaker RH
Behind the Combination
Meter

M OVERALL ELECTRICAL WIRING DIAGRAM

(Cont. next page)

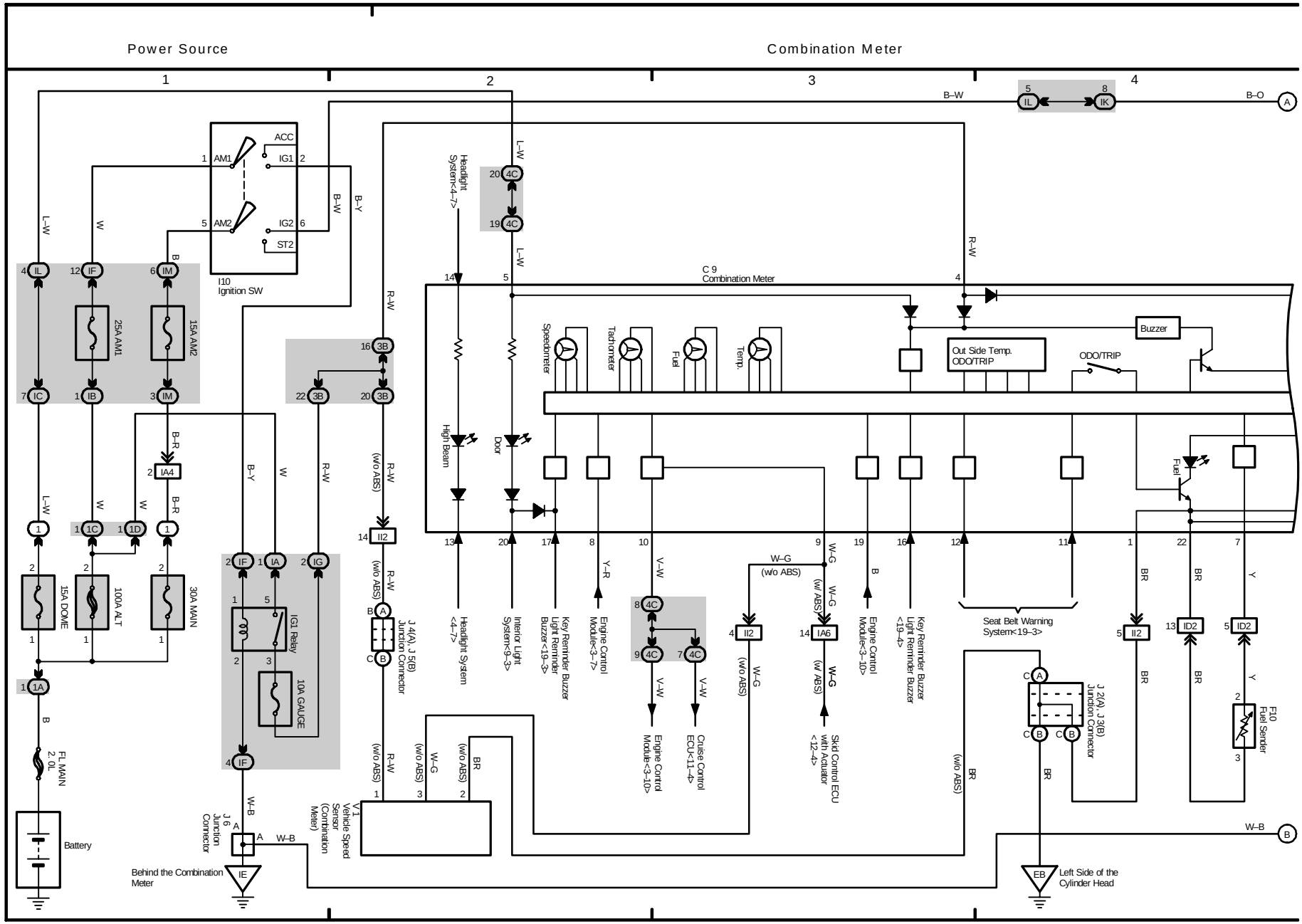

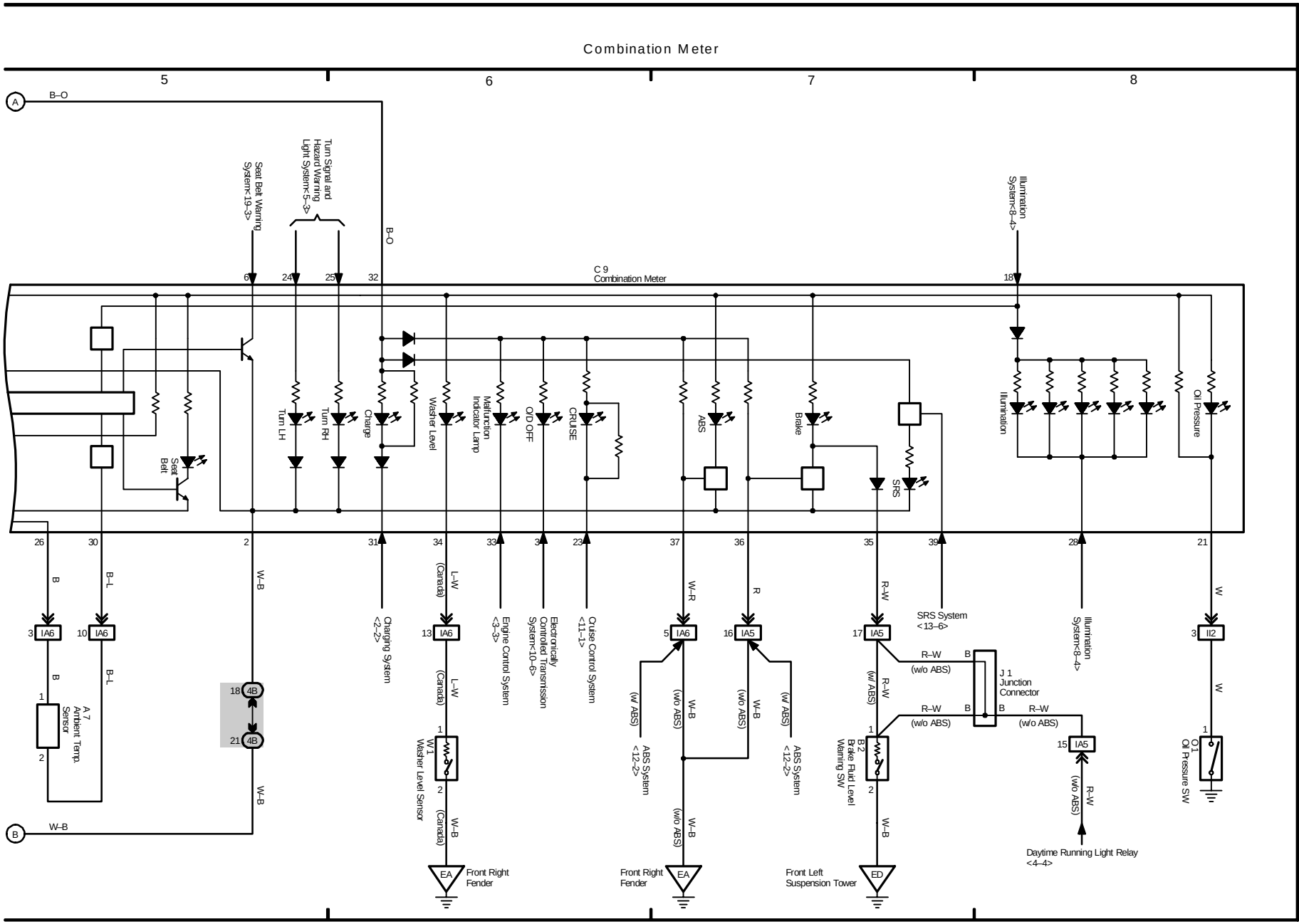
Combination Meter
5
6
7
8
A
B–O
Seat Belt Warning System<19–3>
Turn Signal and Hazard Warning Light System<5–3>
B–O
Illumination System<8–4>
C 9
Combination Meter
6
24
25
32
18
Seat Belt
Turn LH
Turn RH
Charge
Washer Level
Malfunction Indicator Lamp
O/D OFF
CRUISE
ABS
Brake
SRS
Illumination
Oil Pressure
26
30
2
31
34
33
3
23
37
36
35
39
28
21
B
B–L
W–B
L–W (Canada)
W–R
R
R–W
W
3 IA6
10 IA6
13 IA6
5 IA6
16 IA5
17 IA5
3 II2
A 7 Ambient Temp. Sensor
1
2
18 4B
21 4B
Charging System <2–2>
Engine Control System <3–3>
Electronically Controlled Transmission System<10–6>
Cruise Control System <11–1>
SRS System <13–6>
Illumination System<8–4>
W 1 Washer Level Sensor
(Canada)
(w/ ABS)
(w/o ABS)
ABS System <12–2>
J 1 Junction Connector
B 2 Brake Fluid Level Warning SW
15 IA5
Daytime Running Light Relay <4–4>
O 1 Oil Pressure SW
B
W–B
EA
Front Right Fender
ED
Front Left Suspension Tower

M OVERALL ELECTRICAL WIRING DIAGRAM

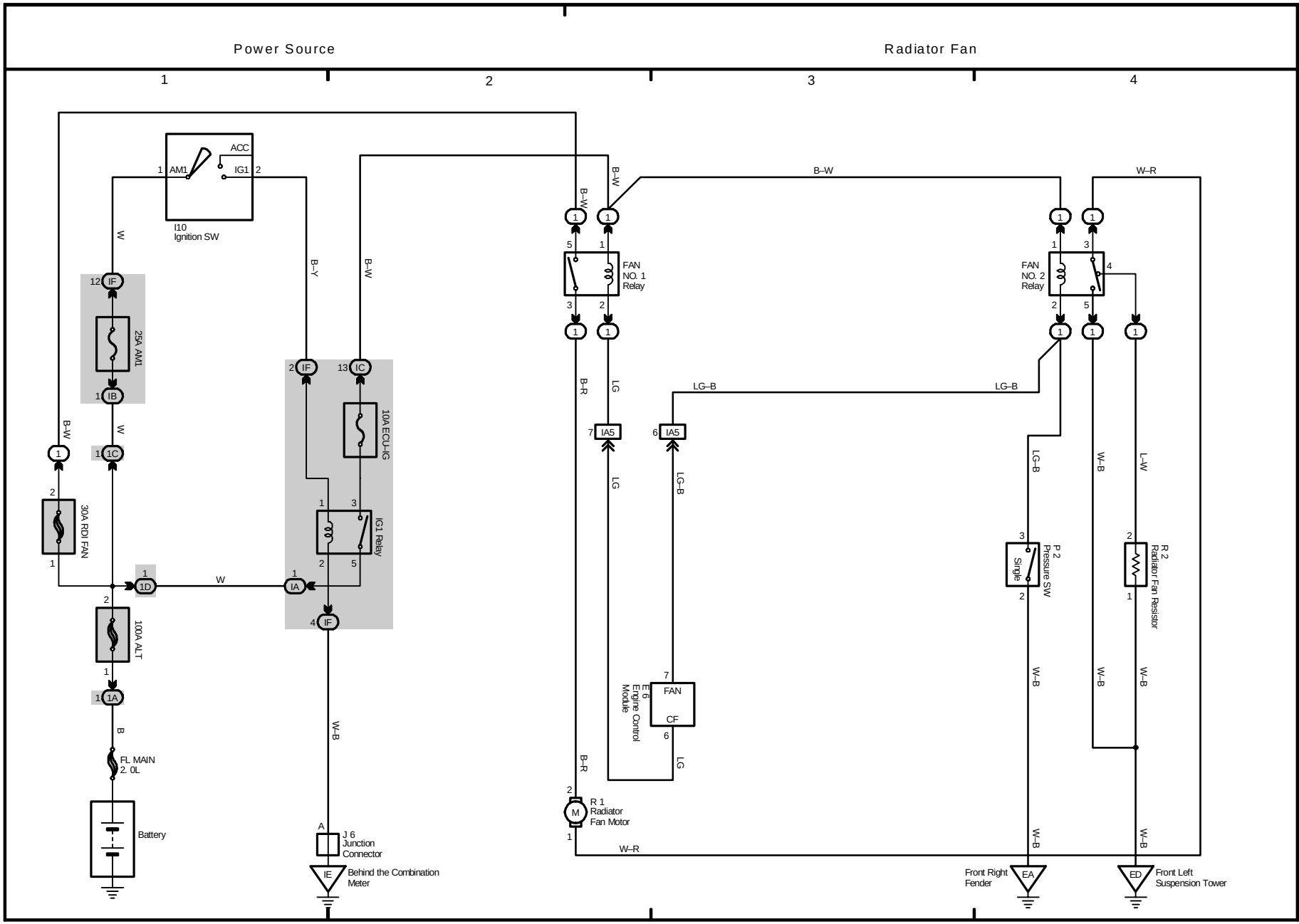
Power Source
Radiator Fan
1
2
3
4
ACC
AM1
IG1
I10
Ignition SW
25A AM1
30A RDI FAN
100A ALT
FL MAIN
2. 0L
Battery
10A ECU-IG
IG1 Relay
J 6
Junction
Connector
Behind the Combination
Meter
FAN
NO. 1
Relay
FAN
NO. 2
Relay
IA5
E 6
Engine Control
Module
FAN
CF
R 1
Radiator
Fan Motor
P 2
Pressure SW
Single
R 2
Radiator Fan Resistor
Front Right
Fender
Front Left
Suspension Tower
B–W
W–R
B–Y
B–R
LG
LG–B
W–B
L–W
W
B

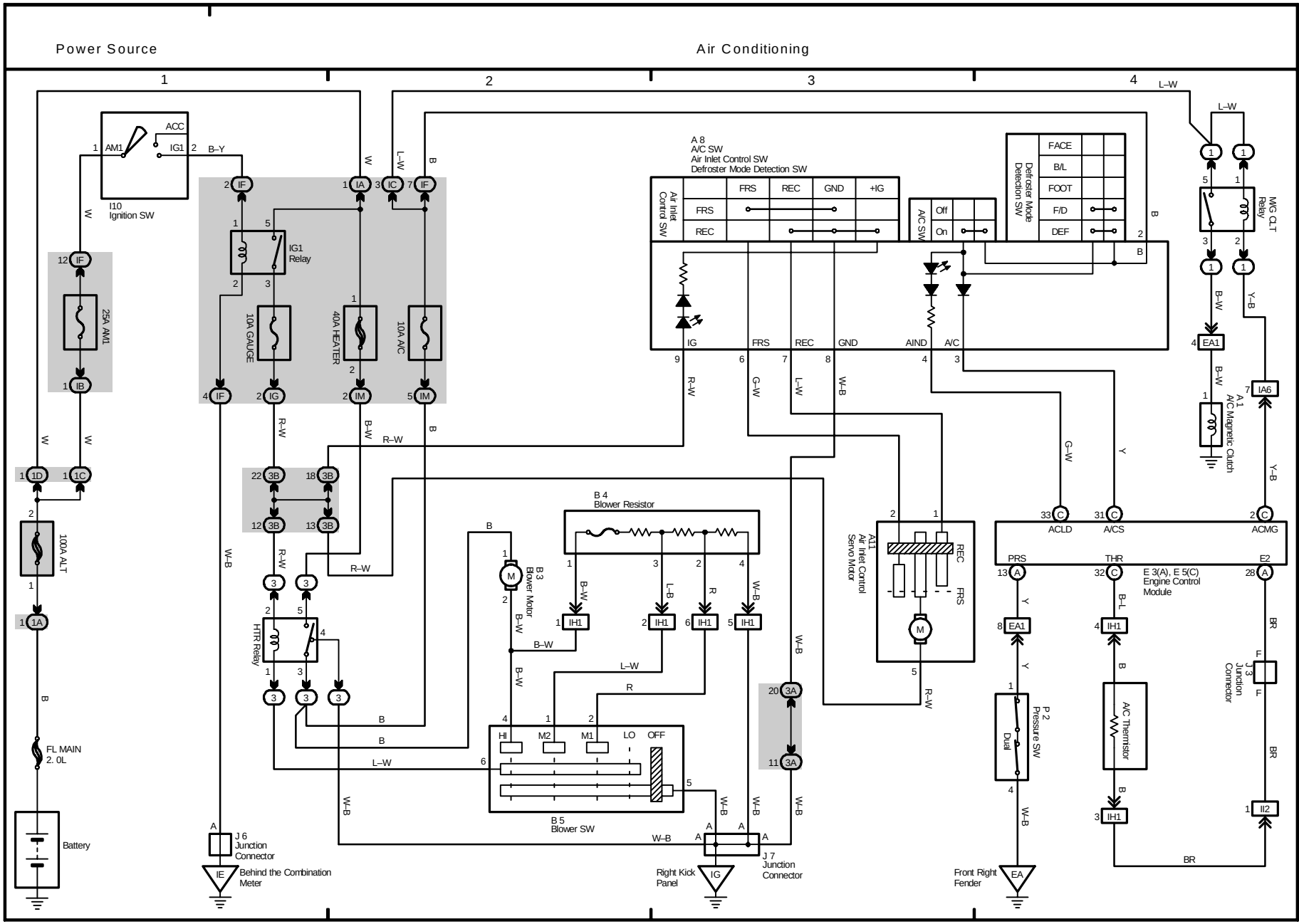
Power Source
Air Conditioning
1
2
3
4
I10
Ignition SW
ACC
AM1
IG1
25A AM1
100A ALT
FL MAIN
2. 0L
Battery
IG1
Relay
10A GAUGE
40A HEATER
10A A/C
HTR Relay
J 6
Junction
Connector
Behind the Combination
Meter
A 8
A/C SW
Air Inlet Control SW
Defroster Mode Detection SW
Air Inlet
Control SW
FRS
REC
GND
+IG
A/C SW
Off
On
Defroster Mode
Detection SW
FACE
B/L
FOOT
F/D
DEF
IG
AIND
A/C
B 4
Blower Resistor
B 3
Blower Motor
B 5
Blower SW
HI
M2
M1
LO
OFF
J 7
Junction
Connector
Right Kick
Panel
A11
Air Inlet Control
Servo Motor
REC
FRS
ACLD
A/CS
ACMG
PRS
THR
E2
E 3(A), E 5(C)
Engine Control
Module
P 2
Pressure SW
Dual
A/C Thermistor
J 3
Junction
Connector
Front Right
Fender
M/G CLT
Relay
A 1
A/C Magnetic Clutch

M OVERALL ELECTRICAL WIRING DIAGRAM

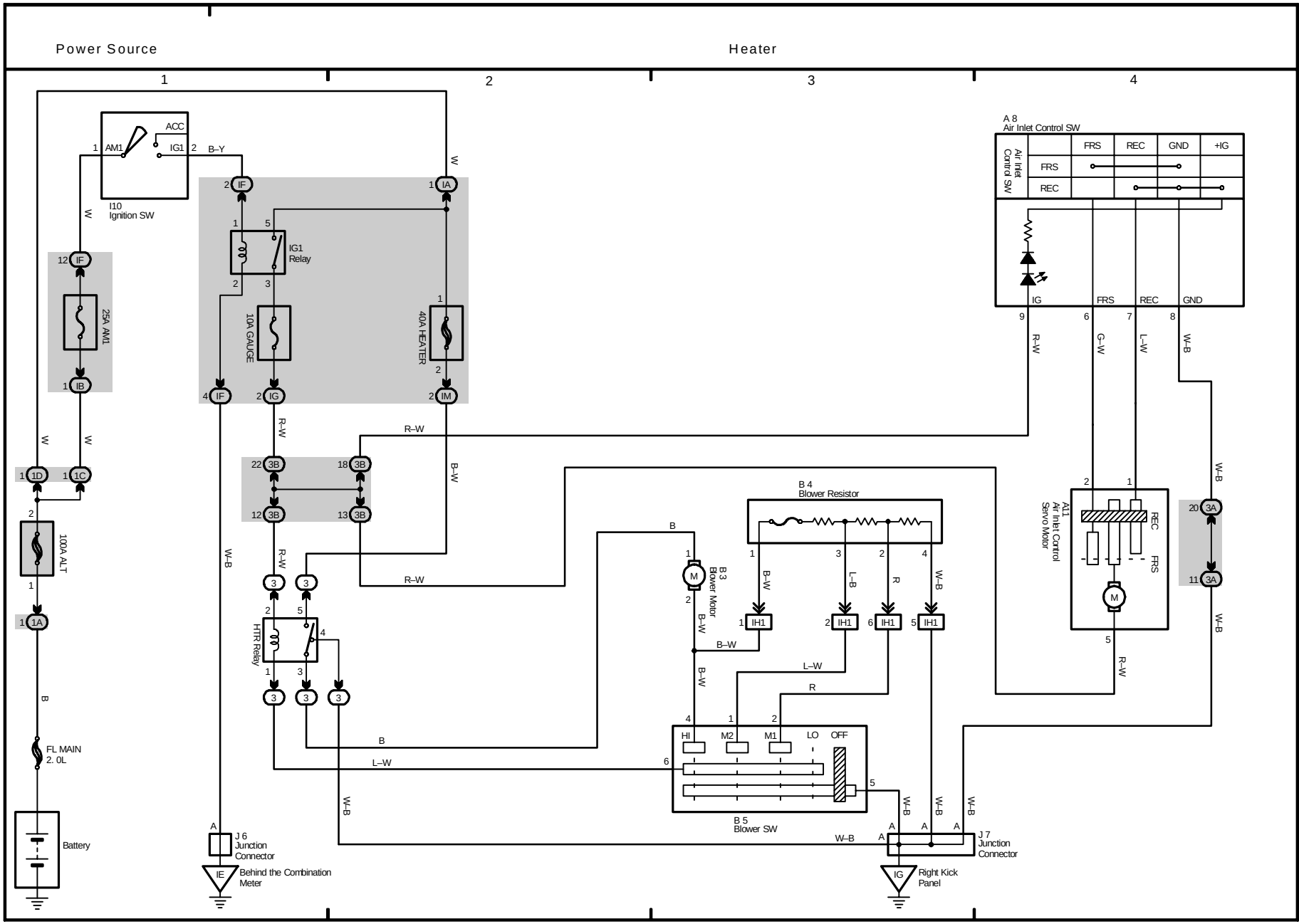
Power Source
Heater
1
2
3
4
ACC
AM1
IG1
B–Y
I10
Ignition SW
IG1
Relay
25A AM1
10A GAUGE
40A HEATER
100A ALT
FL MAIN
2. 0L
Battery
HTR Relay
A 8
Air Inlet Control SW
FRS
REC
GND
+IG
IG
R–W
G–W
L–W
W–B
B 4
Blower Resistor
B 3
Blower Motor
A11
Air Inlet Control
Servo Motor
B 5
Blower SW
HI
M2
M1
LO
OFF
J 6
Junction
Connector
Behind the Combination
Meter
J 7
Junction
Connector
Right Kick
Panel
B–W
L–B
R
L–W
B

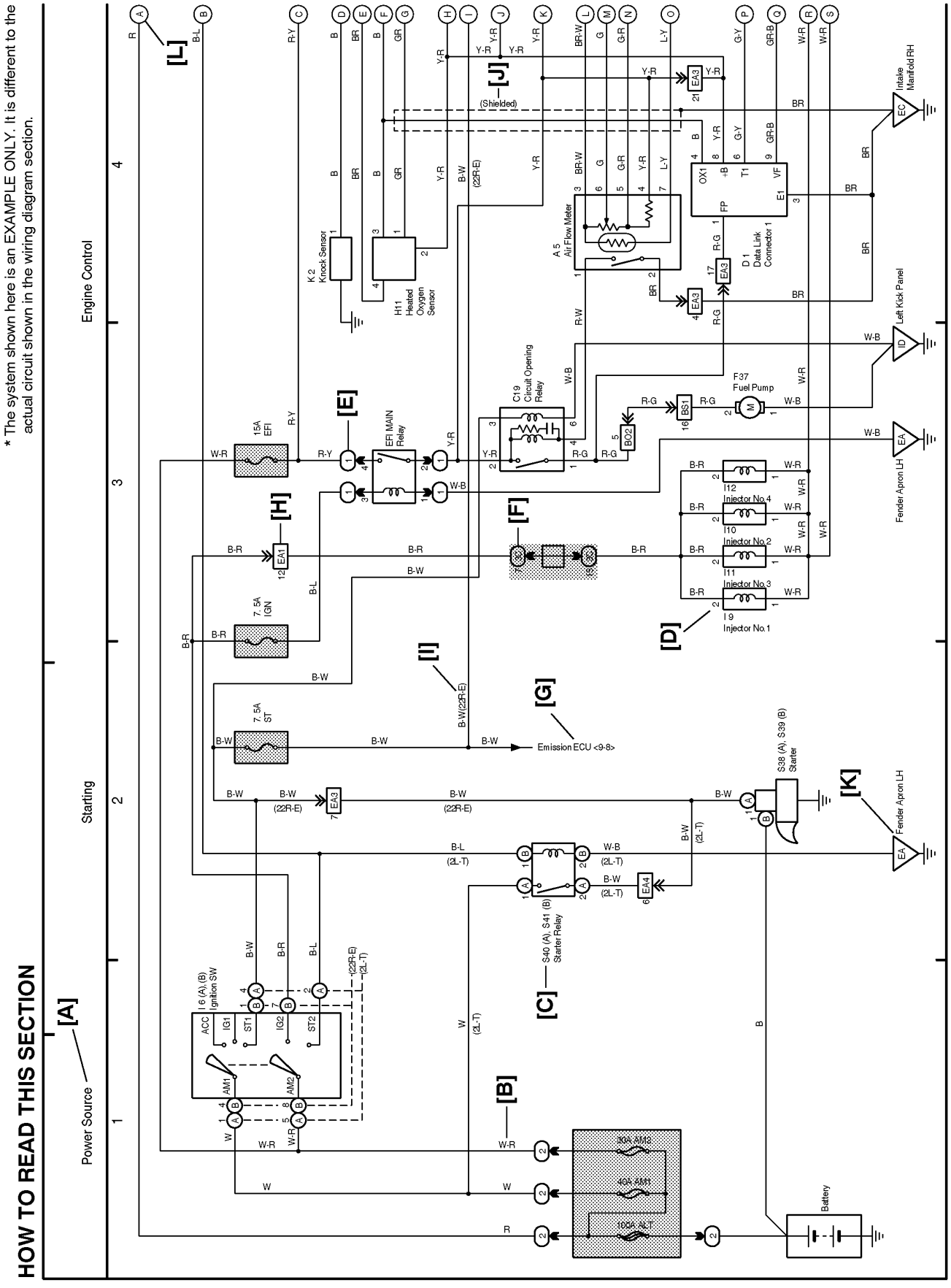
* The system shown here is an EXAMPLE ONLY. It is different to the actual circuit shown in the wiring diagram section.
HOW TO READ THIS SECTION
Power Source
Starting
Engine Control
[A]
[B]
[C]
[D]
[E]
[F]
[G]
[H]
[I]
[J]
[K]
[L]
Knock Sensor
Heated Oxygen Sensor
Air Flow Meter
Data Link Connector 1
Intake Manifold RH
Left Kick Panel
Fuel Pump
Circuit Opening Relay
EFI MAIN Relay
Injector No.4
Injector No.2
Injector No.3
Injector No.1
Fender Apron LH
Emission ECU <9-8>
Starter
Starter Relay
Ignition SW
Battery
40A AM2
40A AM1
100A ALT

[A] : System Title

[B] : Indicates the wiring color.

Wire colors are indicated by an alphabetical code.

B	= Black	W	= White	BR	= Brown
L	= Blue	V	= Violet	SB	= Sky Blue
R	= Red	G	= Green	LG	= Light Green
P	= Pink	Y	= Yellow	GR	= Gray
O	= Orange				

The first letter indicates the basic wire color and the second letter indicates the color of the stripe.

Example: L – Y

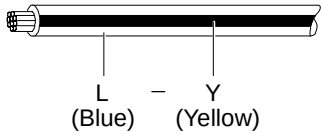

[C] : The position of the parts is the same as shown in the wiring diagram and wire routing.

[D] : Indicates the pin number of the connector. The numbering system is different for female and male connectors.

Example : Numbered in order from upper left to lower right / Numbered in order from upper right to lower left

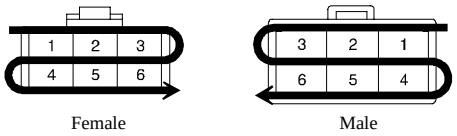

The numbering system for the overall wiring diagram is the same as above

[E] : Indicates a Relay Block. No shading is used and only the Relay Block No. is shown to distinguish it from the J/B.

Example : (1) Indicates Relay Block No.1

[F] : Junction Block (The number in the circle is the J/B No. and the connector code is shown beside it). Junction Blocks are shaded to clearly separate them from other parts.

Example:

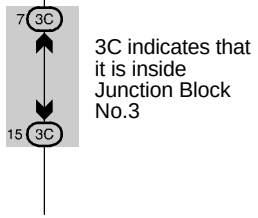

[G] : Indicates related system.

[H] : Indicates the wiring harness and wiring harness connector. The wiring harness with male terminal is shown with arrows (»). Outside numerals are pin numbers.

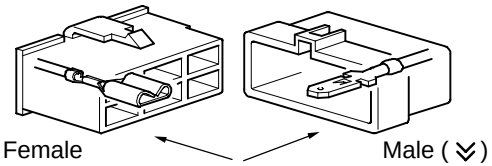

[I] : ( ) is used to indicate different wiring and connector, etc. when the vehicle model, engine type, or specification is different.

[J] : Indicates a shielded cable.



[K] : Indicates and located on ground point.

[L] : The same code occuring on the next page indicates that the wire harness is continuous.

SYSTEM INDEX

SYSTEMS	LOCATION
ABS	12–2
Air Conditioning	26–2
Automatic Glare–Resistant EC Mirror with Compass	14–4
Back–Up Light	10–8
Charging	2–2
Cigarette Lighter	21–2
Clock	21–2
Combination Meter	24–2
Cruise Control	11–2
Door Lock Control	15–2
Electronically Controlled Transmission	10–2
Engine Control	3–2
Fog Light	4–8
Headlight	4–3
Heater	27–2
Horn	21–4
Ignition	1–3
Illumination	8–2
Interior Light	9–2
Key Reminder Buzzer	19–4
Light Reminder Buzzer	19–3
Moon Roof	18–3
Power Outlet	21–3
Power Source	1~27–1
Power Window	17–2
Radiator Fan	25–3
Radio and Player	23–2
Rear Window Defogger	22–2
Remote Control Mirror	20–2
Seat Belt Warning	19–2
Shift Lock	18–4
SRS	13–2
Starting	1–2
Stop Light	7–2
Taillight	6–2
Turn Signal and Hazard Warning Light	5–2
TVIP System	16–2
Wiper and Washer	14–2
Wireless Door Lock Control	15–8

Position of Parts in Engine Compartment

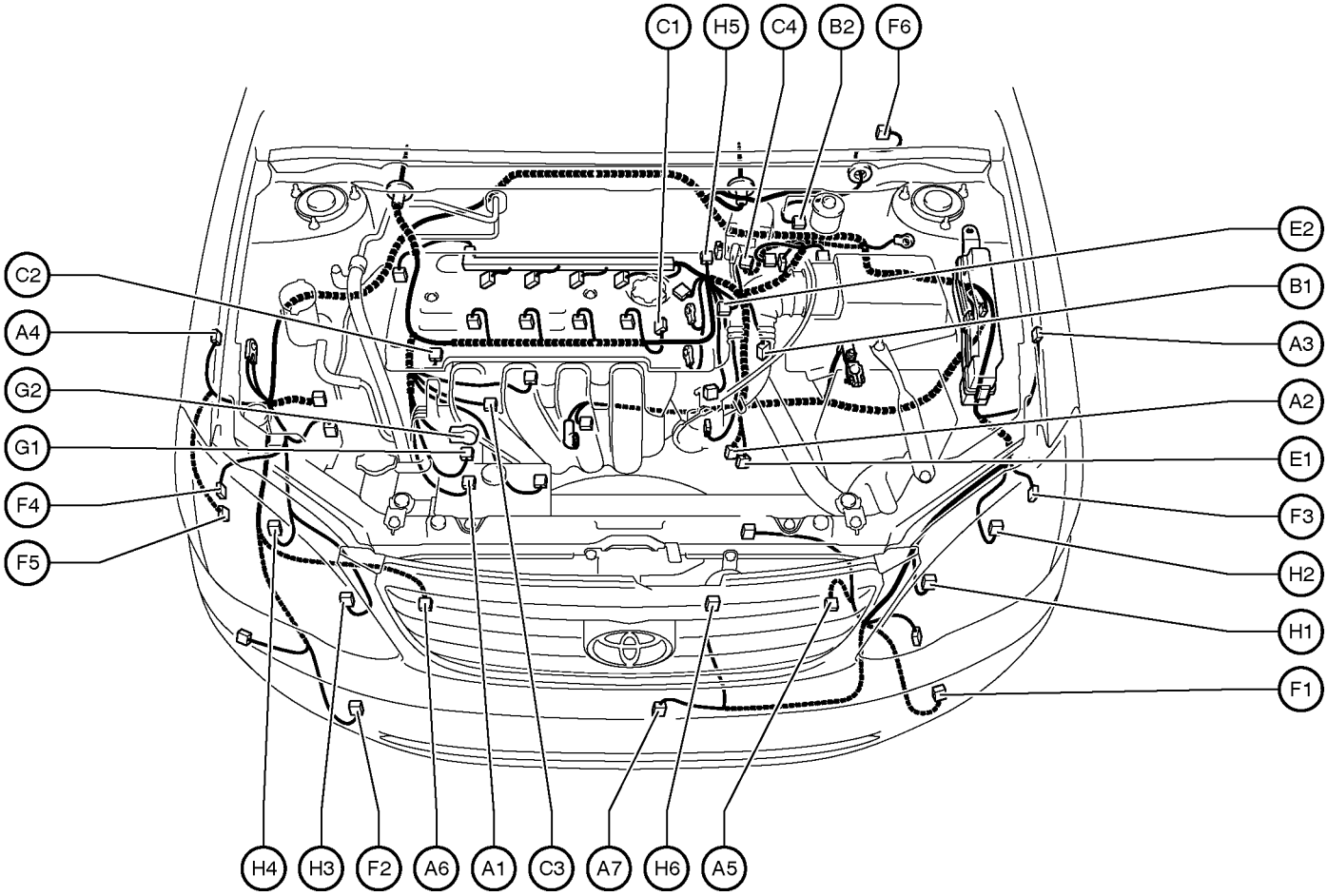

A 1 A/C Magnetic Clutch
A 2 A/T Shift Lever Position SW
Back–Up Light SW
Park/Neutral Position SW
A 3 ABS Speed Sensor Front LH
A 4 ABS Speed Sensor Front RH
A 5 Airbag Sensor Front LH
A 6 Airbag Sensor Front RH
A 7 Ambient Temp. Sensor

B 1 Back–Up Light SW
B 2 Brake Fluid Level Warning SW

C 1 Camshaft Position Sensor
C 2 Camshaft Timing Oil Control Valve (VVT)
C 3 Crankshaft Position Sensor
C 4 Cruise Control Actuator

E 1 Electronically Controlled Transmission Solenoid
E 2 Engine Coolant Temp. Sensor

F 1 Front Fog Light LH
F 2 Front Fog Light RH
F 3 Front Parking Light LH
Front Turn Signal Light LH
F 4 Front Parking Light RH
Front Turn Signal Light RH
F 5 Front Washer Motor
F 6 Front Wiper Motor

G 1 Generator
G 2 Generator

H 1 Headlight LH (High)
H 2 Headlight LH (Low)
H 3 Headlight RH (High)
H 4 Headlight RH (Low)
H 5 Heated Oxygen Sensor (Bank 1 Sensor 1)
H 6 Horn

Position of Parts in Engine Compartment

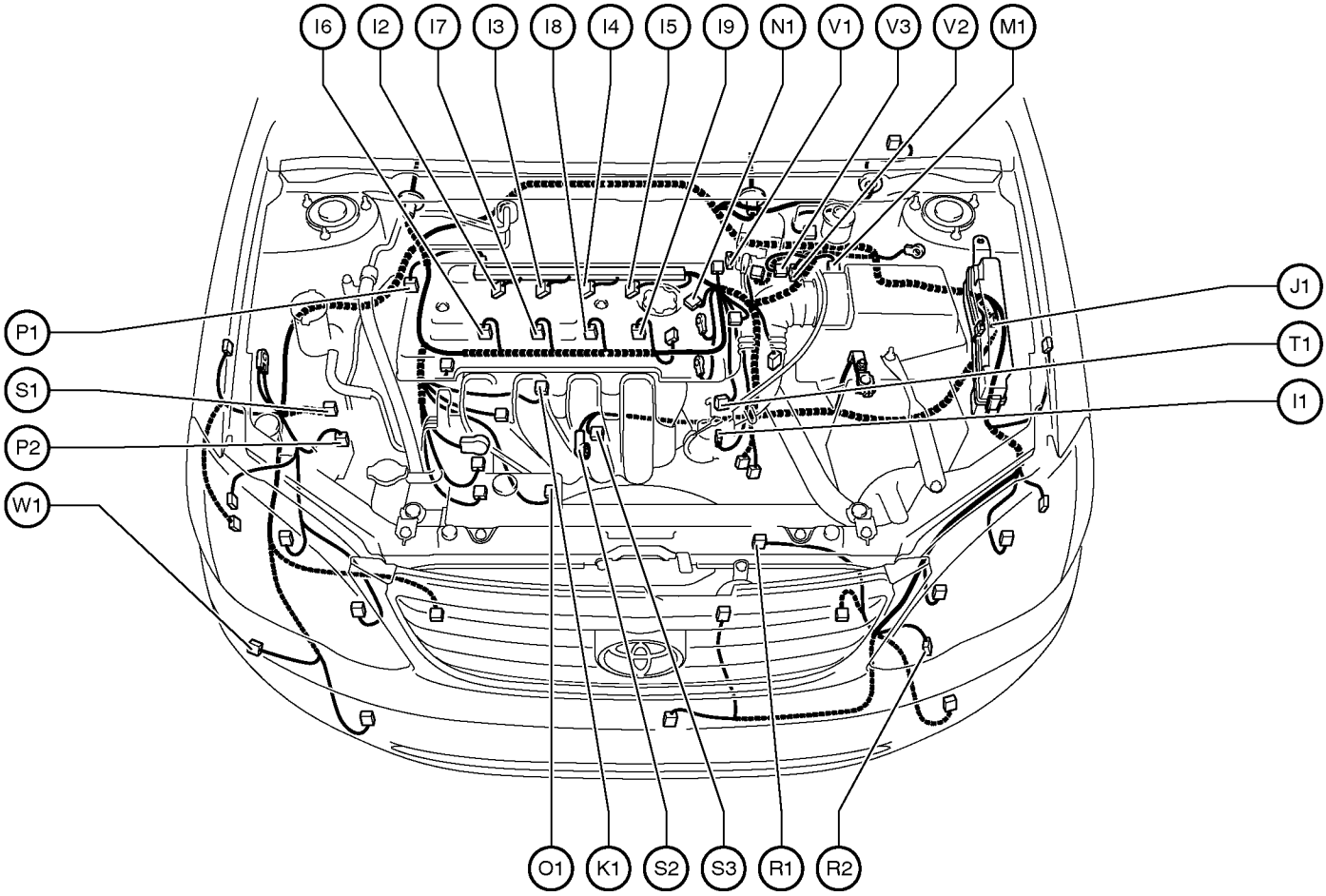

I 1 Idle Air Control Valve
I 2 Ignition Coil and Igniter No.1
I 3 Ignition Coil and Igniter No.2
I 4 Ignition Coil and Igniter No.3
I 5 Ignition Coil and Igniter No.4
I 6 Injector No.1
I 7 Injector No.2
I 8 Injector No.3
I 9 Injector No.4

J 1 Junction Connector

K 1 Knock Sensor

M 1 Mass Air Flow Meter

N 1 Noise Filter (Ignition)

O 1 Oil Pressure SW

P 1 Power Steering Oil Pressure SW
P 2 Pressure SW

R 1 Radiator Fan Motor
R 2 Radiator Fan Resistor

S 1 Skid Control ECU with Actuator
S 2 Starter
S 3 Starter

T 1 Throttle Position Sensor

V 1 Vehicle Speed Sensor (Combination Meter)
V 2 VSV (Canister Closed Valve)
V 3 VSV (EVAP)

W 1 Washer Level Sensor

Position of Parts in Instrument Panel

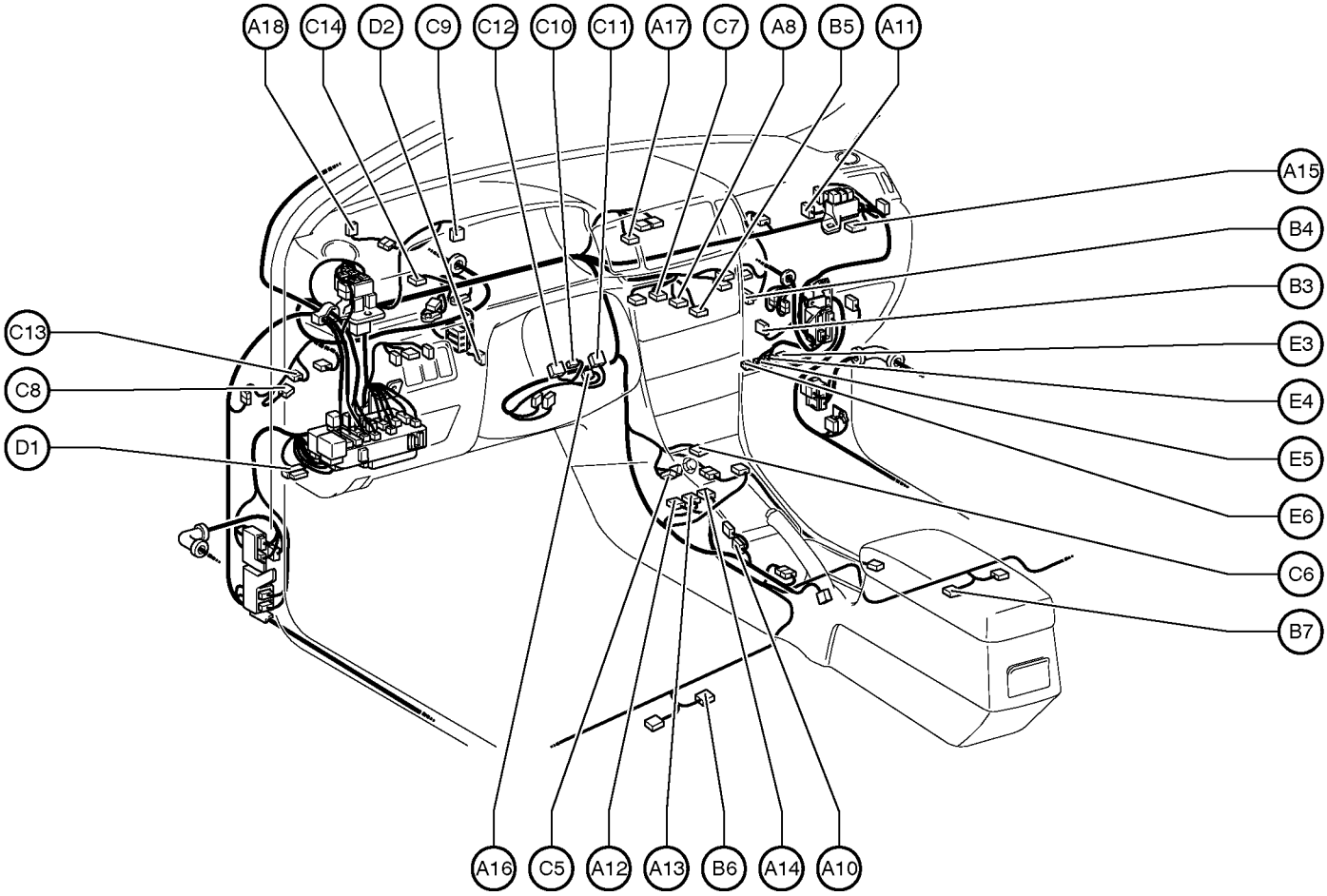

A 8 A/C SW
Air Inlet Control SW
Defroster Mode Detection SW
A10 A/T Shift Lever Illumination
O/D Main SW
A11 Air Inlet Control Servo Motor
A12 Airbag Sensor Assembly
A13 Airbag Sensor Assembly
A14 Airbag Sensor Assembly
A15 Airbag Squib (Front Passenger Airbag Assembly)
A16 Airbag Squib (Steering Wheel Pad)
A17 Antenna Amplifier
A18 Automatic Light Control Sensor

B 3 Blower Motor
B 4 Blower Resistor
B 5 Blower SW
B 6 Buckle SW LH
Seat Position Sensor
B 7 Buckle SW RH
Occupant Detection Sensor

C 5 Cigarette Lighter
Power Outlet (Front)
C 6 Cigarette Lighter Illumination
C 7 Clock
C 8 Clutch Start SW
C 9 Combination Meter
C10 Combination SW
C11 Combination SW
C12 Combination SW
C13 Cruise Control Clutch SW
C14 Cruise Control ECU

D 1 Data Link Connector 3
D 2 Daytime Running Light Relay

E 3 Engine Control Module
E 4 Engine Control Module
E 5 Engine Control Module
E 6 Engine Control Module

Position of Parts in Instrument Panel

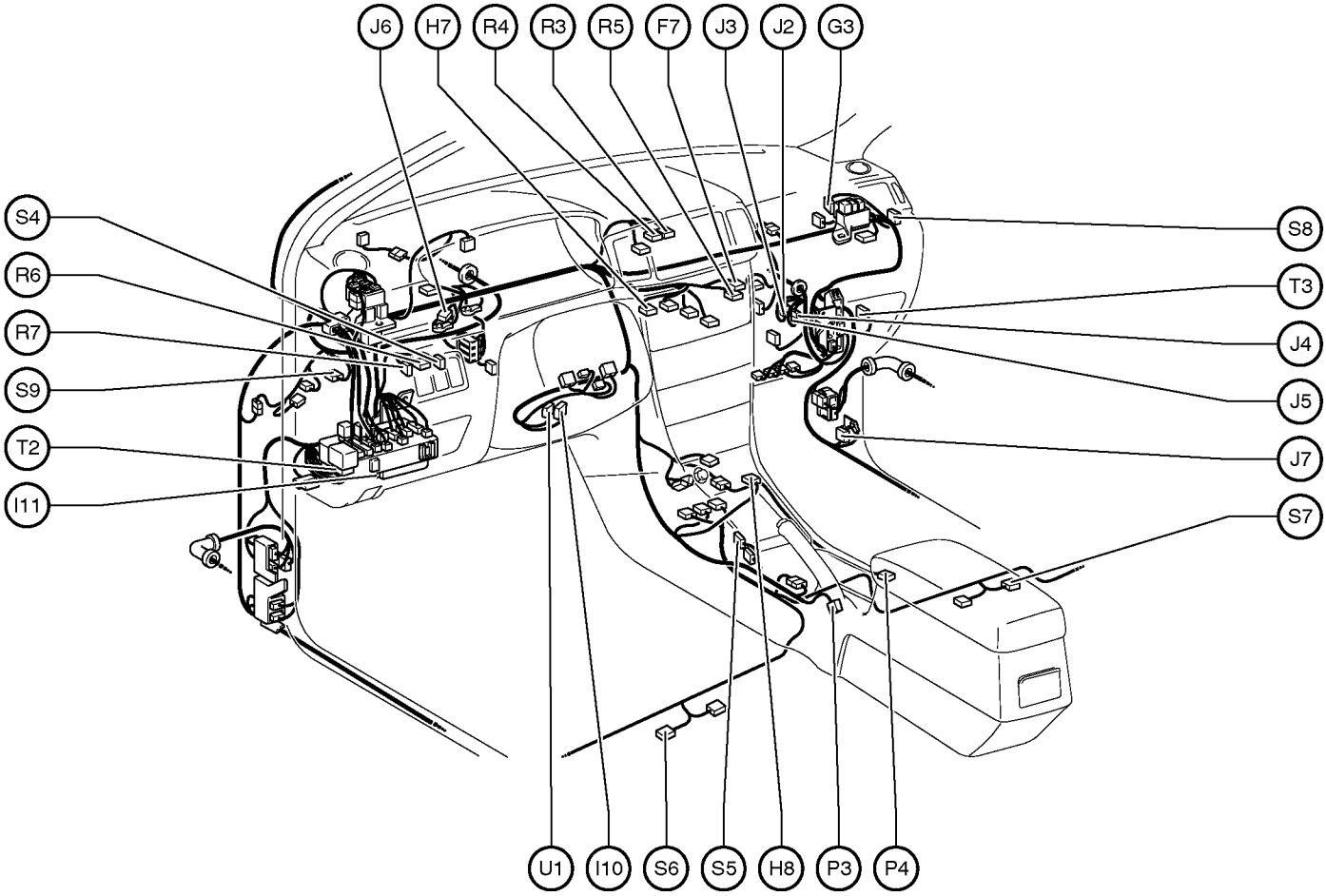

F 7 Front Passenger Seat Belt Warning Light

G 3 Glass Breakage Sensor ECU

H 7 Hazard SW
H 8 Heated Oxygen Sensor (Bank 1 Sensor 2)

I 10 Ignition SW
I 11 Integration Relay

J 2 Junction Connector
J 3 Junction Connector
J 4 Junction Connector
J 5 Junction Connector
J 6 Junction Connector
J 7 Junction Connector

P 3 Parking Brake SW
P 4 Power Outlet (Rear)

R 3 Radio and Player
R 4 Radio and Player
R 5 Rear Window Defogger SW
R 6 Remote Control Mirror SW
R 7 Rheostat

S 4 Security Indicator
S 5 Shift Lock Control ECU
S 6 Side Airbag Squib LH
S 7 Side Airbag Squib RH
S 8 Starter Cut Relay
S 9 Stop Light SW

T 2 Turn Signal Flasher Relay
T 3 TVIP ECU

U 1 Unlock Warning SW

Position of Parts in Body

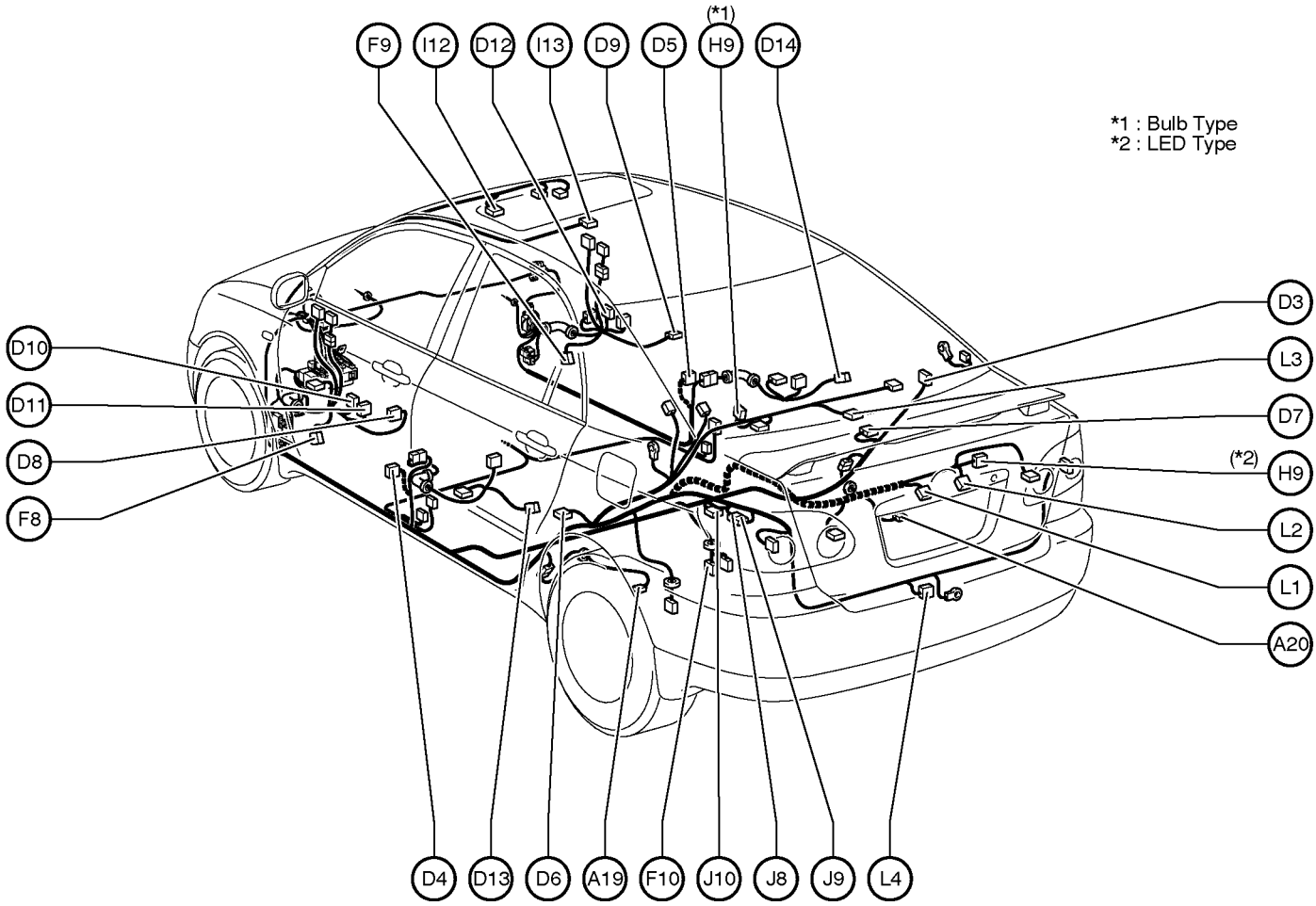

A19 ABS Speed Sensor Rear LH
A20 ABS Speed Sensor Rear RH

D 3 Door Control Receiver
D 4 Door Courtesy SW Front LH
D 5 Door Courtesy SW Front RH
D 6 Door Courtesy SW Rear LH
D 7 Door Courtesy SW Rear RH
D 8 Door Key Lock and Unlock SW Front LH
Door Lock Motor Front LH
Door Unlock Detection SW Front LH
D 9 Door Key Lock and Unlock SW Front RH
Door Lock Motor Front RH
Door Unlock Detection SW Front RH
D10 Door Lock Control SW Front LH
D11 Door Lock Control SW Front LH
Power Window Master SW
D12 Door Lock Control SW Front RH
D13 Door Lock Motor Rear LH
D14 Door Lock Motor Rear RH

F 8 Front Door Speaker LH
F 9 Front Door Speaker RH
F10 Fuel Pump
Fuel Sender

H 9 High Mounted Stop Light

I 12 Inner Mirror
Personal Light
I 13 Interior Light

J 8 Junction Connector
J 9 Junction Connector
J10 Junction Connector

L 1 License Plate Light LH
L 2 License Plate Light RH
L 3 Luggage Compartment Light
L 4 Luggage Compartment Light SW

Position of Parts in Body

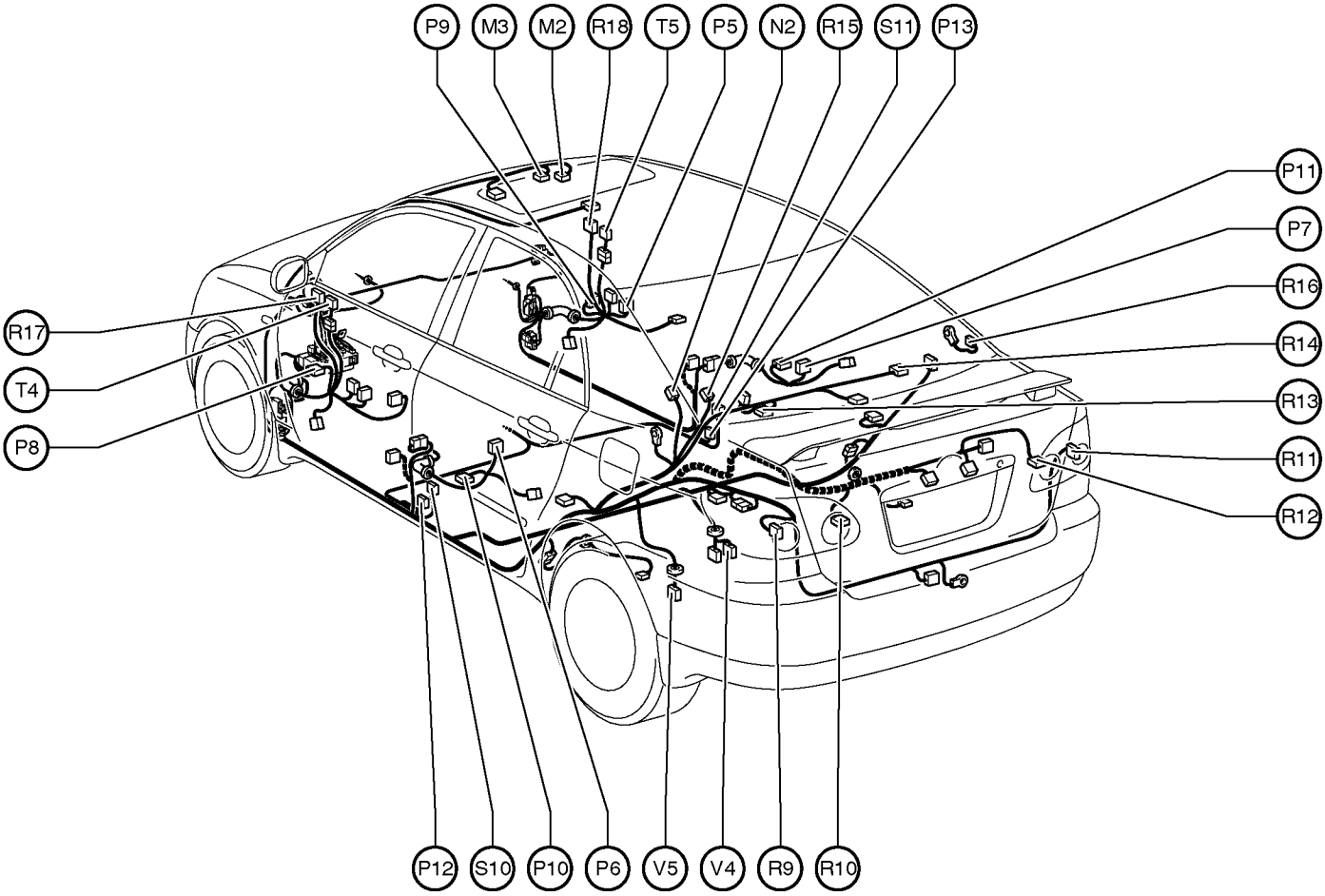

M 2 Moon Roof Control Relay and SW Personal Light
M 3 Moon Roof Motor and Limit SW

N 2 Noise Filter (Rear Window Defogger)

P 5 Power Window Control SW Front RH
P 6 Power Window Control SW Rear LH
P 7 Power Window Control SW Rear RH
P 8 Power Window Motor Front LH
P 9 Power Window Motor Front RH
P10 Power Window Motor Rear LH
P11 Power Window Motor Rear RH
P12 Pretensioner LH
P13 Pretensioner RH

R 9 Rear Combination Light LH
R10 Rear Combination Light LH
R11 Rear Combination Light RH
R12 Rear Combination Light RH
R13 Rear Speaker LH
R14 Rear Speaker RH
R15 Rear Window Defogger
R16 Rear Window Defogger
R17 Remote Control Mirror LH
R18 Remote Control Mirror RH

S10 Side Airbag Sensor LH
S11 Side Airbag Sensor RH

T 4 Tweeter LH
T 5 Tweeter RH

V 4 Vapor Pressure Sensor
V 5 VSV (Vapor Pressure Sensor)

L PART NUMBER OF CONNECTORS

Code	Part Name	Part Number
A 1	A/C Magnetic Clutch	90980–11271
A 2	A/T Shift Lever Position SW	90980–11784
	Back–Up Light SW	
	Park/Neutral Position SW	
A 3	ABS Speed Sensor Front LH	90980–11003
A 4	ABS Speed Sensor Front RH	
A 5	Airbag Sensor Front LH	90980–11856
A 6	Airbag Sensor Front RH	
A 7	Ambient Temp. Sensor	90980–11030
A 8	A/C SW	90980–12162
	Air Inlet Control SW	
	Defroster Mode Detection SW	
A10	A/T Shift Lever Illumination	90980–12211
	O/D Main SW	
A11	Air Inlet Control Servo Motor	90980–11909
A12	Airbag Sensor Assembly	90980–11869
A13	Airbag Sensor Assembly	90980–11872
A14	Airbag Sensor Assembly	90980–11867
A15	Airbag Squib (Front Passenger Airbag Assembly)	90980–12160
A16	Airbag Squib (Steering Wheel Pad)	
A17	Antenna Amplifier	90980–10871
A18	Automatic Light Control Sensor	90980–11107
A19	ABS Speed Sensor Rear LH	90980–11900
A20	ABS Speed Sensor Rear RH	
B 1	Back–Up Light SW	90980–11250
B 2	Brake Fluid Level Warning SW	90980–11207
B 3	Blower Motor	90980–10214
B 4	Blower Resistor	90980–11136
B 5	Blower SW	90980–10877
B 6	Buckle SW LH	90980–12257
	Seat Position Sensor	
B 7	Buckle SW RH	90980–11950
	Occupant Detection Sensor	
C 1	Camshaft Position Sensor	90980–10947
C 2	Camshaft Timing Oil Control Valve (VVT)	90980–11162
C 3	Crankshaft Position Sensor	90980–10947
C 4	Cruise Control Actuator	90980–11150
C 5	Cigarette Lighter	90980–10760
	Power Outlet (Front)	
C 6	Cigarette Lighter Illumination	90980–11148
C 7	Clock	90980–11950
C 8	Clutch Start SW	90980–10825
C 9	Combination Meter	90980–12169
C10	Combination SW	90980–12183
C11	Combination SW	90980–12008
C12	Combination SW	90980–12007

Code	Part Name	Part Number
C13	Cruise Control Clutch SW	90980–10906
C14	Cruise Control ECU	90980–12094
D 1	Data Link Connector 3	90980–11665
D 2	Daytime Running Light Relay	90980–12034
D 3	Door Control Receiver	90980–11909
D 4	Door Courtesy SW Front LH	90980–10871
D 5	Door Courtesy SW Front RH	
D 6	Door Courtesy SW Rear LH	
D 7	Door Courtesy SW Rear RH	
D 8	Door Key Lock and Unlock SW Front LH	90980–12226
	Door Lock Motor Front LH	
	Door Unlock Detection SW Front LH	
D 9	Door Key Lock and Unlock SW Front RH	
	Door Lock Motor Front RH	
	Door Unlock Detection SW Front RH	
D10	Door Lock Control SW Front LH	90980–10797
D11	Door Lock Control SW Front LH	90980–12122
	Power Window Master SW	
D12	Door Lock Control SW Front RH	90980–10797
D13	Door Lock Motor Rear LH	90980–12226
D14	Door Lock Motor Rear RH	
E 1	Electronically Controlled Transmission Solenoid	90980–10854
E 2	Engine Coolant Temp. Sensor	90980–10737
E 3	Engine Control Module	90980–12144
E 4	Engine Control Module	90980–12145
E 5	Engine Control Module	90980–12146
E 6	Engine Control Module	90980–12142
F 1	Front Fog Light LH	90980–11156
F 2	Front Fog Light RH	
F 3	Front Parking Light LH	90980–11020
	Front Turn Signal Light LH	
F 4	Front Parking Light RH	
	Front Turn Signal Light RH	
F 5	Front Washer Motor	90980–10981
F 6	Front Wiper Motor	90980–11599
F 7	Front Passenger Seat Belt Warning Light	90980–11296
F 8	Front Door Speaker LH	90980–10935
F 9	Front Door Speaker RH	
F10	Fuel Pump	90980–11077
	Fuel Sender	
G 1	Generator	90980–11349
G 2	Generator	90980–09373
G 3	Glass Breakage Sensor ECU	90980–10799
H 1	Headlight LH (High)	90080–98039
H 2	Headlight LH (Low)	90080–98038
H 3	Headlight RH (High)	90080–98039

Note: Not all of the above part numbers of the connector are established for the supply.

Code	Part Name	Part Number
H 4	Headlight RH (Low)	90080–98038
H 5	Heated Oxygen Sensor (Bank 1 Sensor 1)	90980–10869
H 6	Horn	90980–10619
H 7	Hazard SW	90980–10933
H 8	Heated Oxygen Sensor (Bank 1 Sensor 2)	90980–10794
H 9	High Mounted Stop Light (Bulb Type)	90980–10860
	High Mounted Stop Light (LED Type)	90980–11367
I 1	Idle Air Control Valve	90980–11145
I 2	Ignition Coil and Igniter No.1	90980–11885
I 3	Ignition Coil and Igniter No.2	
I 4	Ignition Coil and Igniter No.3	
I 5	Ignition Coil and Igniter No.4	
I 6	Injector No.1	90980–11875
I 7	Injector No.2	
I 8	Injector No.3	
I 9	Injector No.4	
I10	Ignition SW	90980–11778
I11	Integration Relay	90980–12203
I12	Inner Mirror	90980–11794
	Personal Light	
I13	Interior Light	90980–10908
J 1	Junction Connector	90980–10803
J 2	Junction Connector	90980–11915
J 3	Junction Connector	
J 4	Junction Connector	90980–11661
J 5	Junction Connector	
J 6	Junction Connector	90980–11539
J 7	Junction Connector	90980–11686
J 8	Junction Connector	90980–11661
J 9	Junction Connector	
J10	Junction Connector	90980–10803
K 1	Knock Sensor	90980–11875
L 1	License Plate Light LH	90980–11148
L 2	License Plate Light RH	
L 3	Luggage Compartment Light	
L 4	Luggage Compartment Light SW	90980–11097
M 1	Mass Air Flow Meter	90980–11317
M 2	Moon Roof Control Relay and SW	90980–10799
	Personal Light	
M 3	Moon Roof Motor and Limit SW	90980–11011
N 1	Noise Filter (Ignition)	90980–10843
N 2	Noise Filter (Rear Window Defogger)	90980–10825
O 1	Oil Pressure SW	90980–11363
P 1	Power Steering Oil Pressure SW	90980–11428
P 2	Pressure SW	90980–10943
P 3	Parking Brake SW	90980–10871

Code	Part Name	Part Number
P 4	Power Outlet (Rear)	90980–10760
P 5	Power Window Control SW Front RH	90980–10789
P 6	Power Window Control SW Rear LH	
P 7	Power Window Control SW Rear RH	
P 8	Power Window Motor Front LH	90980–10797
P 9	Power Window Motor Front RH	
P10	Power Window Motor Rear LH	
P11	Power Window Motor Rear RH	
P12	Pretensioner LH	90980–12253
P13	Pretensioner RH	
R 1	Radiator Fan Motor	90980–10928
R 2	Radiator Fan Resistor	
R 3	Radio and Player	90980–10997
R 4	Radio and Player	90980–10996
R 5	Rear Window Defogger SW	90980–10789
R 6	Remote Control Mirror SW	90980–11657
R 7	Rheostat	90980–12217
R 9	Rear Combination Light LH	90980–10795
R10	Rear Combination Light LH	90980–11148
R11	Rear Combination Light RH	90980–10795
R12	Rear Combination Light RH	90980–11148
R13	Rear Speaker LH	90980–11299
R14	Rear Speaker RH	
R15	Rear Window Defogger	90980–10914
R16	Rear Window Defogger	90980–10913
R17	Remote Control Mirror LH	90980–10907
R18	Remote Control Mirror RH	
S 1	Skid Control ECU with Actuator	82824–12300
S 2	Starter	90980–09463
S 3	Starter	90980–11400
S 4	Security Indicator	90980–11013
S 5	Shift Lock Control ECU	90980–11909
S 6	Side Airbag Squib LH	90980–11864
S 7	Side Airbag Squib RH	
S 8	Starter Cut Relay	82660–0C010
S 9	Stop Light SW	90980–11118
S10	Side Airbag Sensor LH	90980–12225
S11	Side Airbag Sensor RH	
T 1	Throttle Position Sensor	90980–11261
T 2	Turn Signal Flasher Relay	90980–10799
T 3	TVIP ECU	90980–12169
T 4	Tweeter LH	90980–10915
T 5	Tweeter RH	
U 1	Unlock Warning SW	90980–10860
V 1	Vehicle Speed Sensor (Combination Meter)	90980–11143
V 2	VSV (Canister Closed Valve)	90980–11162

L PART NUMBER OF CONNECTORS

Code	Part Name	Part Number	Code	Part Name	Part Number
V 3	VSV (EVAP)	90980–11156			
V 4	Vapor Pressure Sensor	90980–11143			
V 5	VSV (Vapor Pressure Sensor)	90980–11859			
W 1	Washer Level Sensor	90980–11068			

Note: Not all of the above part numbers of the connector are established for the supply.

Code	Part Name	Part Number	Code	Part Name	Part Number

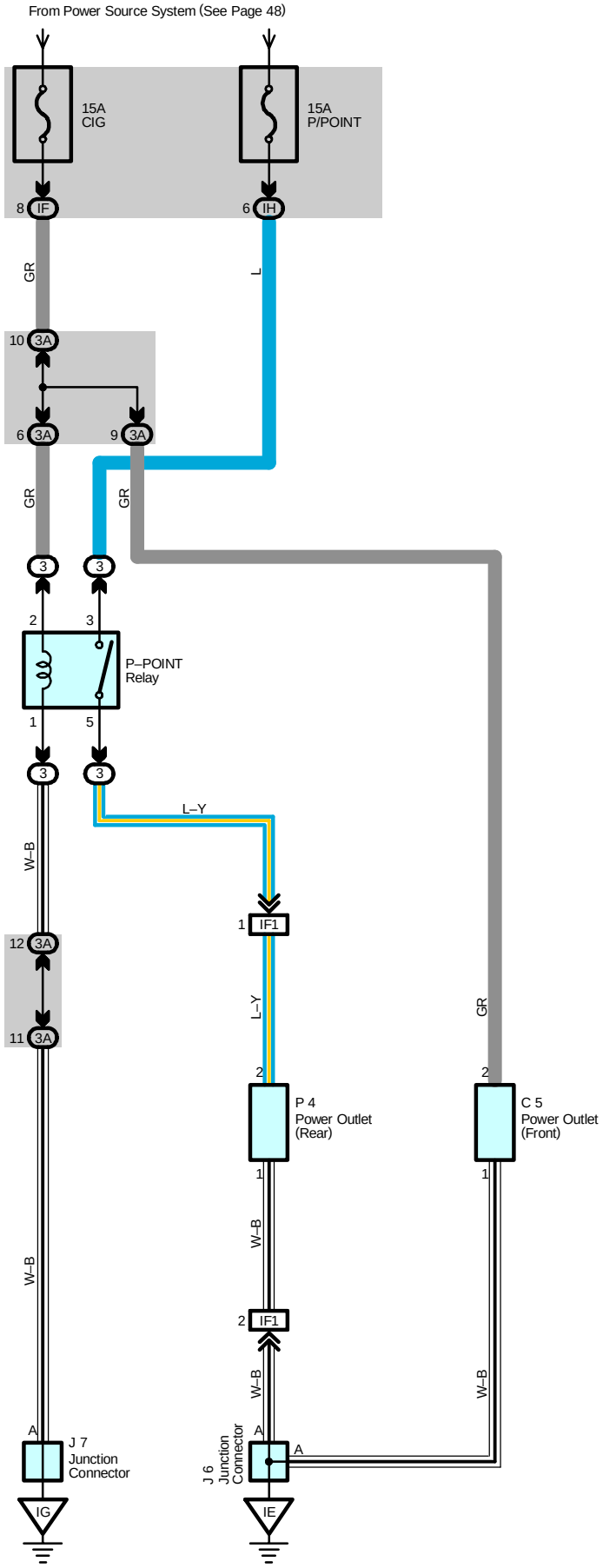
From Power Source System (See Page 48)
15A
CIG
15A
P/POINT
8 IF
6 IH
GR
L
10 3A
6 3A
9 3A
GR
GR
3
3
2
3
P–POINT
Relay
1
5
3
3
L–Y
W–B
1 IF1
12 3A
11 3A
L–Y
GR
2
2
P 4
Power Outlet
(Rear)
C 5
Power Outlet
(Front)
1
1
W–B
2 IF1
W–B
W–B
A
J 7
Junction
Connector
A
J 6
Junction
Connector
A
IG
IE

Service Hints

P–POINT Relay

3–5 : Closed with ignition SW at ACC or ON position

1–Ground : Always continuity

: Parts Location

Code	See Page	Code	See Page	Code	See Page
C5	34	J7	35		
J6	35	P4	35		

: Relay Blocks

Code	See Page	Relay Blocks (Relay Block Location)
3	28	RH R/B (Right Side of the Instrument Panel Reinforcement)

: Junction Block and Wire Harness Connector

Code	See Page	Junction Block and Wire Harness (Connector Location)
IF	25	Instrument Panel Wire and Instrument Panel J/B (Lower Finish Panel)
IH		
3A	28	Instrument Panel Wire and RH J/B (Right Side of the Instrument Panel Reinforcement)

: Connector Joining Wire Harness and Wire Harness

Code	See Page	Joining Wire Harness and Wire Harness (Connector Location)
IF1	42	Console Box Wire and Instrument Panel Wire (Under the Instrument Panel Center)

: Ground Points

Code	See Page	Ground Points Location
IE	40	Behind the Combination Meter
IG	40	Right Kick Panel

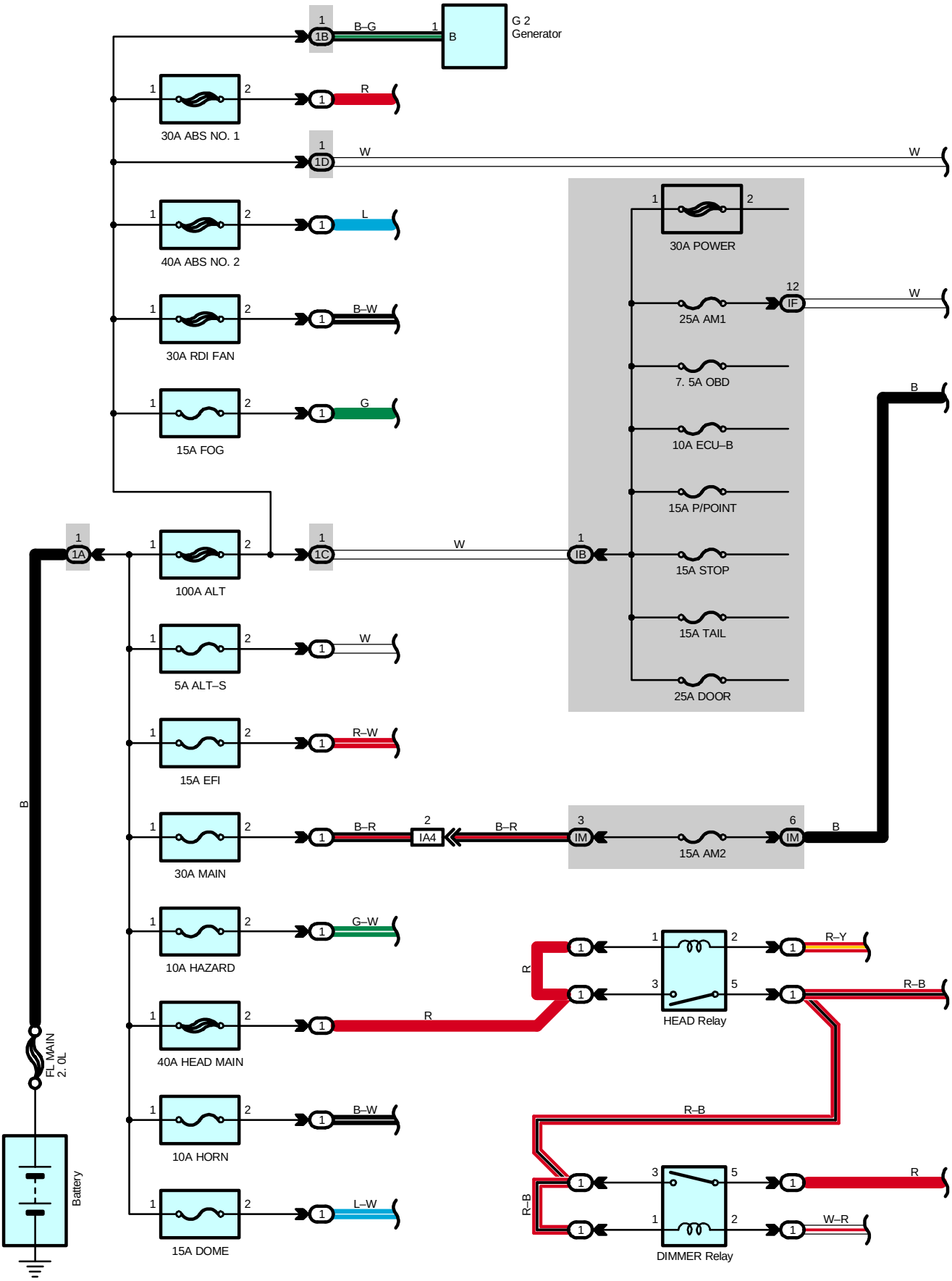
G 2
Generator
B–G
30A ABS NO. 1
R
W
40A ABS NO. 2
L
30A RDI FAN
B–W
15A FOG
G
30A POWER
25A AM1
7. 5A OBD
10A ECU–B
15A P/POINT
15A STOP
15A TAIL
25A DOOR
100A ALT
5A ALT–S
15A EFI
30A MAIN
B–R
15A AM2
10A HAZARD
G–W
40A HEAD MAIN
HEAD Relay
R–Y
R–B
10A HORN
15A DOME
L–W
DIMMER Relay
W–R
FL MAIN
2. 0L
Battery

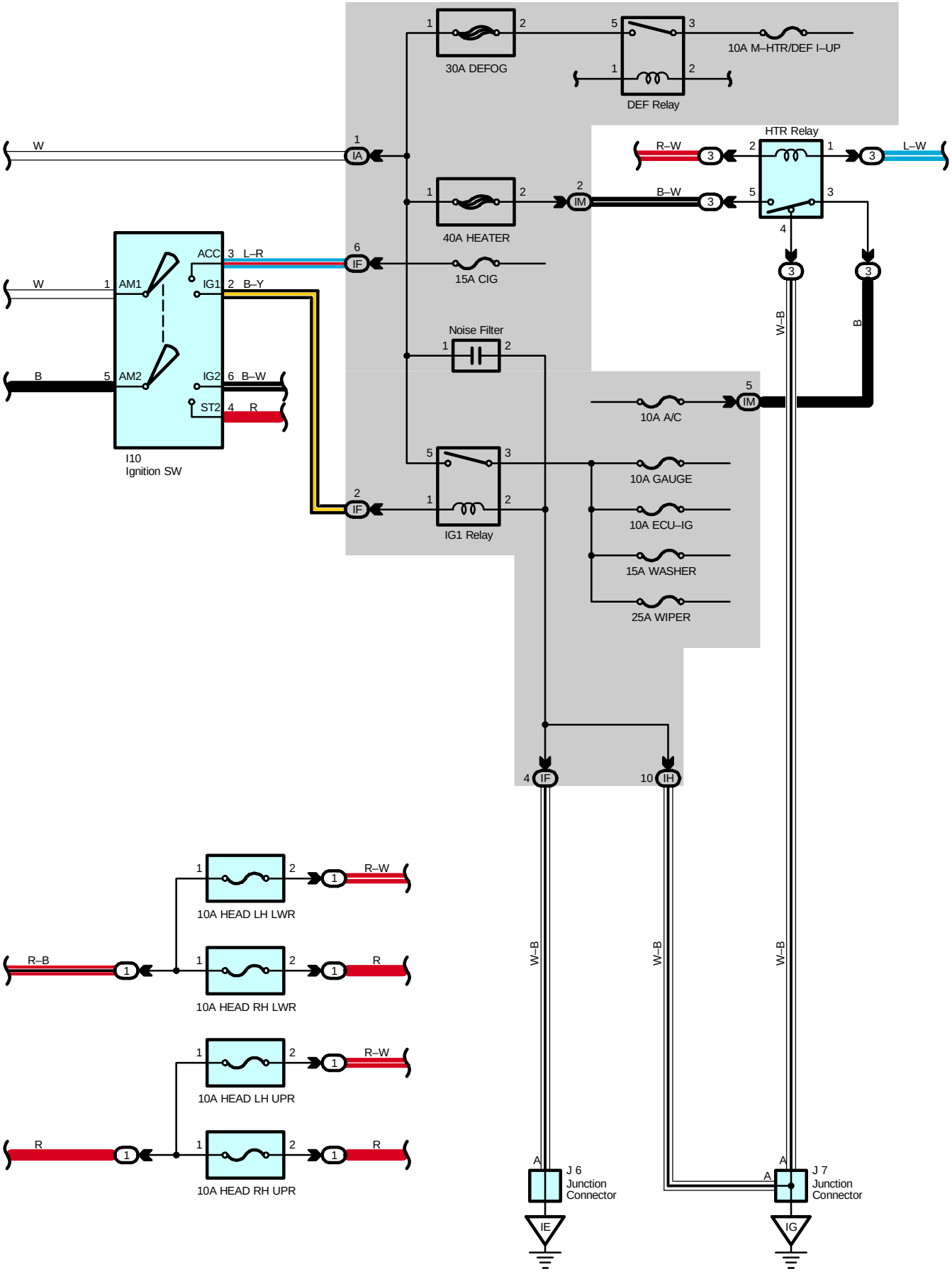
30A DEFOG
DEF Relay
10A M–HTR/DEF I–UP
HTR Relay
R–W
L–W
B–W
W
IA
IM
40A HEATER
ACC
L–R
IF
15A CIG
AM1
IG1
B–Y
AM2
IG2
B–W
ST2
R
I10
Ignition SW
Noise Filter
W–B
B
10A A/C
IG1 Relay
10A GAUGE
10A ECU–IG
15A WASHER
25A WIPER
IH
10A HEAD LH LWR
10A HEAD RH LWR
10A HEAD LH UPR
10A HEAD RH UPR
R–B
J 6
Junction
Connector
J 7
Junction
Connector
IE
IG

Power Source

Service Hints

HEAD Relay

3–5 : Closed with the light control SW at Head position or the dimmer SW at Flash position
: Closed with the engine running and the parking brake lever is released (Parking brake SW off)

I10 Ignition SW

1–3 : Closed with the ignition SW at ACC or ON position
1–2 : Closed with the ignition SW at ON or ST position
5–6 : Closed with the ignition SW at ON or ST position
5–4 : Closed with the ignition SW at ST position

: Parts Location

Code	See Page	Code	See Page	Code	See Page
G2	32	J6	35		
I10	35	J7	35		

: Relay Blocks

Code	See Page	Relay Blocks (Relay Block Location)
1	22	Engine Room R/B (Engine Compartment Left)
3	28	RH R/B (Right Side of the Instrument Panel Reinforcement)

: Junction Block and Wire Harness Connector

Code	See Page	Junction Block and Wire Harness (Connector Location)
IA	25	Engine Room Main Wire and Instrument Panel J/B (Lower Finish Panel)
IB		
IF	25	Instrument Panel Wire and Instrument Panel J/B (Lower Finish Panel)
IH		
IM	24	
1A	22	Engine Wire and Engine Room J/B (Engine Compartment Left)
1B		
1C	22	Engine Room Main Wire and Engine Room J/B (Engine Compartment Left)
1D		

: Connector Joining Wire Harness and Wire Harness

Code	See Page	Joining Wire Harness and Wire Harness (Connector Location)
IA4	40	Engine Room Main Wire and Instrument Panel Wire (Left Side of the Instrument Panel Reinforcement)

: Ground Points

Code	See Page	Ground Points Location
IE	40	Behind the Combination Meter
IG	40	Right Kick Panel

J POWER SOURCE (Current Flow Chart)

The chart below shows the route by which current flows from the battery to each electrical source (Fusible Link, Circuit Breaker, Fuse, etc.) and other Parts.

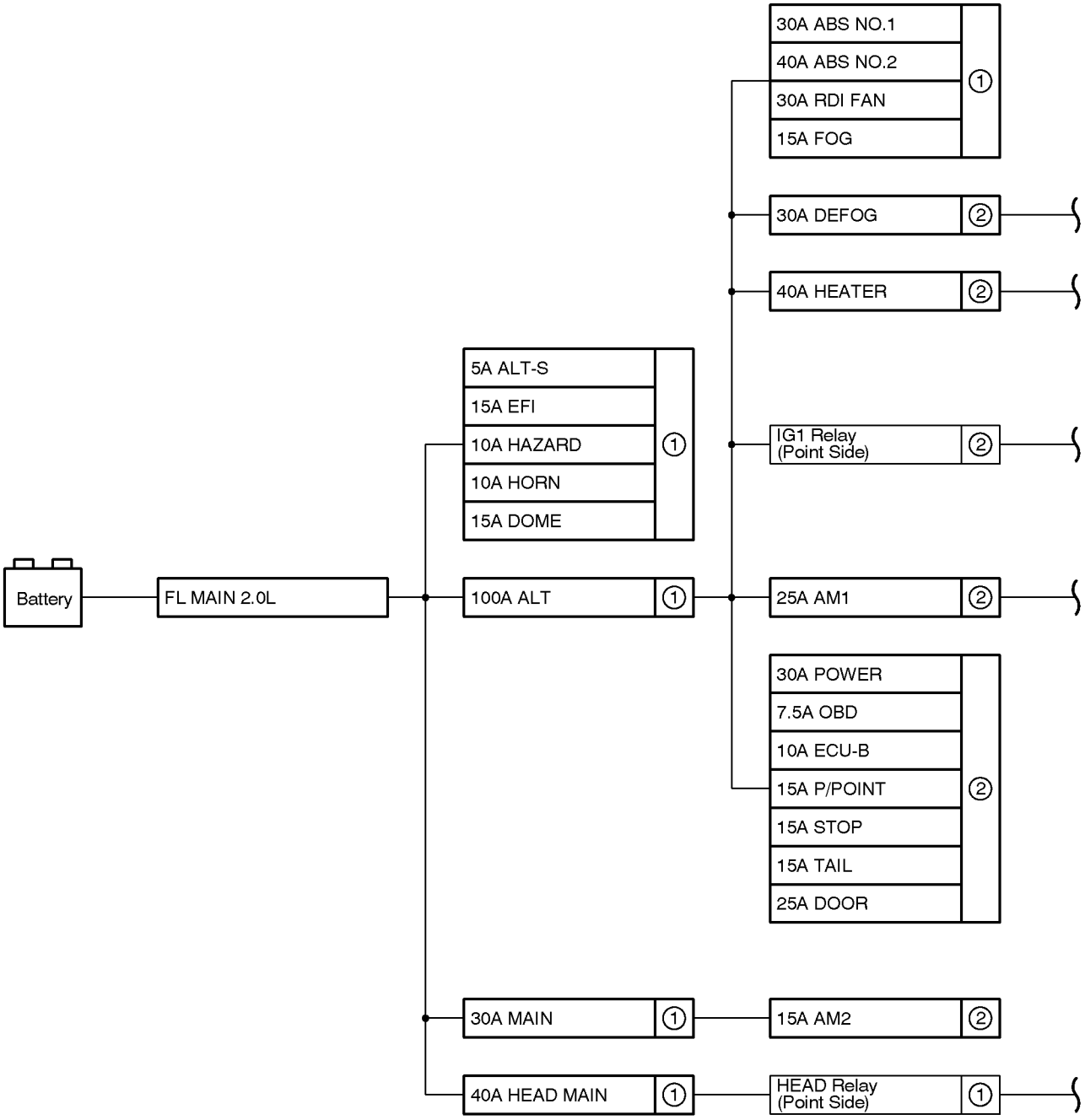

[LOCATION] ① : Engine Room R/B, Engine Room J/B (See Page 22)
② : Instrument Panel J/B (See Page 24)
③ : RH R/B, RH J/B (See Page 28)

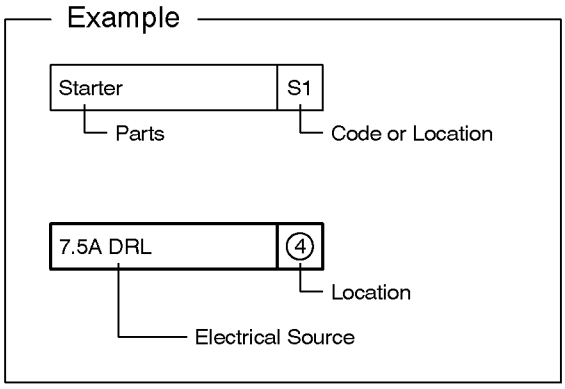
Example
Starter
S1
Parts
Code or Location
7.5A DRL
4
Location
Electrical Source

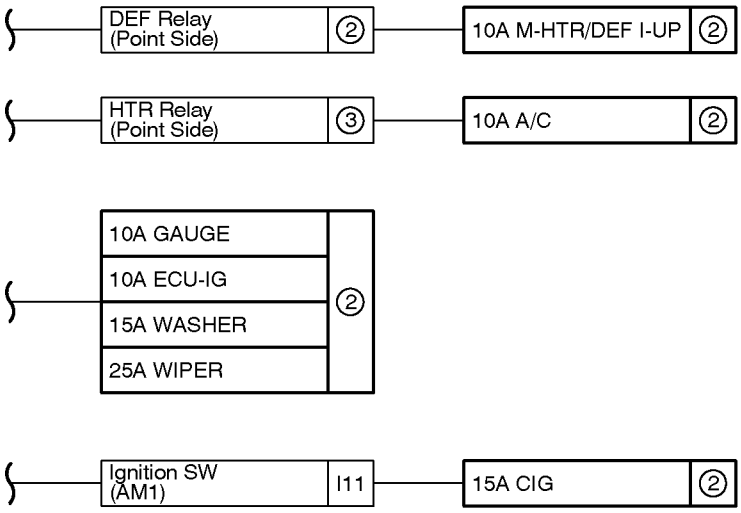
DEF Relay (Point Side)
2
10A M-HTR/DEF I-UP
2
HTR Relay (Point Side)
3
10A A/C
2
10A GAUGE
10A ECU-IG
15A WASHER
25A WIPER
2
Ignition SW (AM1)
I11
15A CIG
2

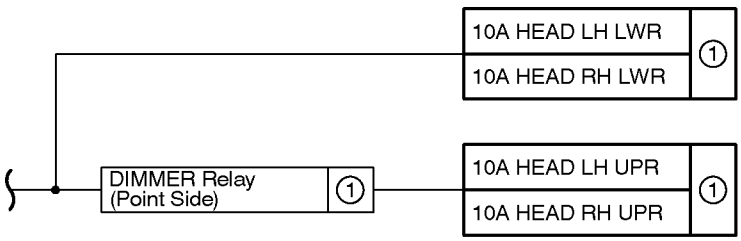
10A HEAD LH LWR
10A HEAD RH LWR
1
DIMMER Relay (Point Side)
1
10A HEAD LH UPR
10A HEAD RH UPR
1

Engine Room R/B,Engine Room J/B (See Page 22)

Fuse		System	Page
5A	ALT–S	Charging	56
10A	HAZARD	Turn Signal and Hazard Warning Light	78
10A	HEAD LH LWR	Headlight	70
10A	HEAD LH UPR	Headlight	70
10A	HEAD RH LWR	Headlight	70
10A	HEAD RH UPR	Combination Meter Headlight	180 70
10A	HORN	Horn TVIP System Wireless Door Lock Control	102 134 126
15A	DOME	ABS Clock Combination Meter Cruise Control Headlight Illumination Interior Light Light Reminder Buzzer and Key Reminder Buzzer Radio and Player Seat Belt Warning SRS TVIP System Wireless Door Lock Control	154 106 180 148 70 86 90 168 176 172 159 134 126
15A	EFI	Electronically Controlled Transmission Engine Control	142 58
15A	FOG	Fog Light	76
30A	ABS NO.1	ABS	154
30A	MAIN	ABS Charging Combination Meter Cruise Control Electronically Controlled Transmission Engine Control SRS Starting and Ignition TVIP System	154 56 180 148 142 58 159 52 134
30A	RDI FAN	Radiator Fan	186
40A	ABS NO.2	ABS	154
40A	HEAD MAIN	Headlight TVIP System Wireless Door Lock Control	70 134 126

* These are the page numbers of the first page on which the related system is shown.

Fuse		System	Page
100A	ALT	Charging Illumination Taillight	56 86 82

Instrument Panel J/B (See Page 24)

Fuse		System	Page
7.5A	OBD	Engine Control	58
10A	A/C	Air Conditioning	188
10A	ECU–B	Fog Light Headlight TVIP System	76 70 134
10A	ECU–IG	ABS Cruise Control Radiator Fan Shift Lock TVIP System	154 148 186 166 134
10A	GAUGE	ABS Air Conditioning Automatic Glare–Resistant EC Mirror with Compass Back–Up Light Charging Combination Meter Cruise Control Electronically Controlled Transmission Engine Control Fog Light Headlight Heater Interior Light Light Reminder Buzzer and Key Reminder Buzzer Moon Roof Power Window Rear Window Defogger Seat Belt Warning SRS Turn Signal and Hazard Warning Light	154 188 112 96 56 180 148 142 58 76 70 192 90 168 140 114 174 172 159 78
10A	M–HTR/DEF I–UP	Engine Control	58
15A	AM2	ABS Charging Combination Meter Cruise Control Electronically Controlled Transmission Engine Control SRS	154 56 180 148 142 58 159

∗ These are the page numbers of the first page on which the related system is shown.

J POWER SOURCE (Current Flow Chart)

Fuse		System	Page
15A	AM2	Starting and Ignition	52
		TVIP System	134
15A	CIG	Cigarette Lighter	104
		Clock	106
		Power Outlet	108
		Radio and Player	176
		Remote Control Mirror	110
15A	P/POINT	Power Outlet	108
15A	STOP	ABS	154
		Cruise Control	148
		Electronically Controlled Transmission	142
		Engine Control	58
		Shift Lock	166
		Stop Light	94
15A	TAIL	Clock	106
		Engine Control	58
		Headlight	70
		Illumination	86
		Light Reminder Buzzer and Key Reminder Buzzer	168
		Taillight	82
15A	WASHER	Wiper and Washer	98
25A	DOOR	Door Lock Control	118
		Interior Light	90
		Wireless Door Lock Control	126
25A	WIPER	Wiper and Washer	98
30A	POWER	Moon Roof	140
		Power Window	114
40A	DEFOG	Rear Window Defogger	174
40A	HEATER	Air Conditioning	188
		Heater	192

* These are the page numbers of the first page on which the related system is shown.

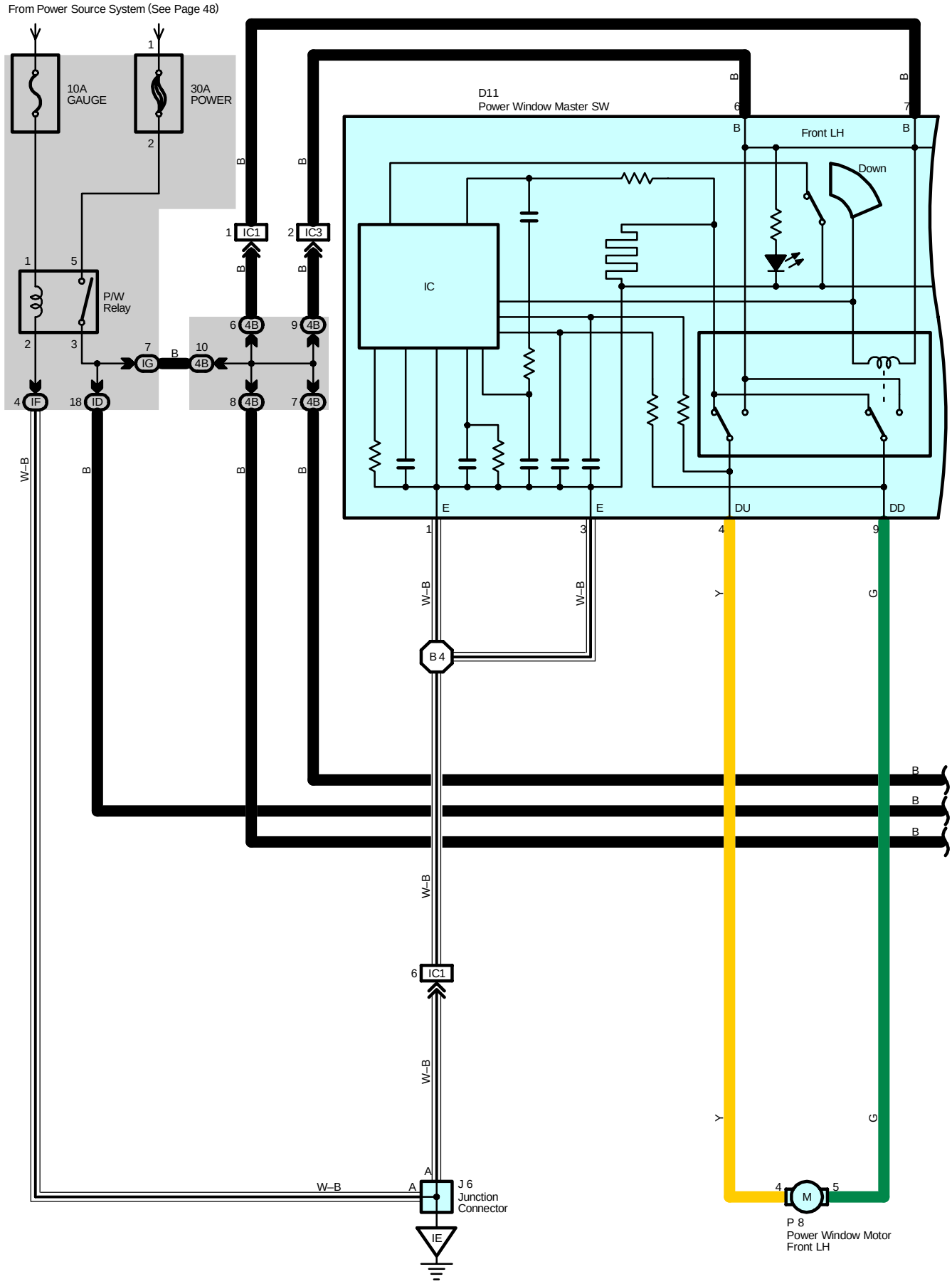
From Power Source System (See Page 48)
10A
GAUGE
30A
POWER
P/W
Relay
IC1
IC3
IG
IF
ID
4B
D11
Power Window Master SW
Front LH
Down
IC
E
DU
DD
W–B
B
Y
G
B 4
J 6
Junction
Connector
IE
P 8
Power Window Motor
Front LH
M

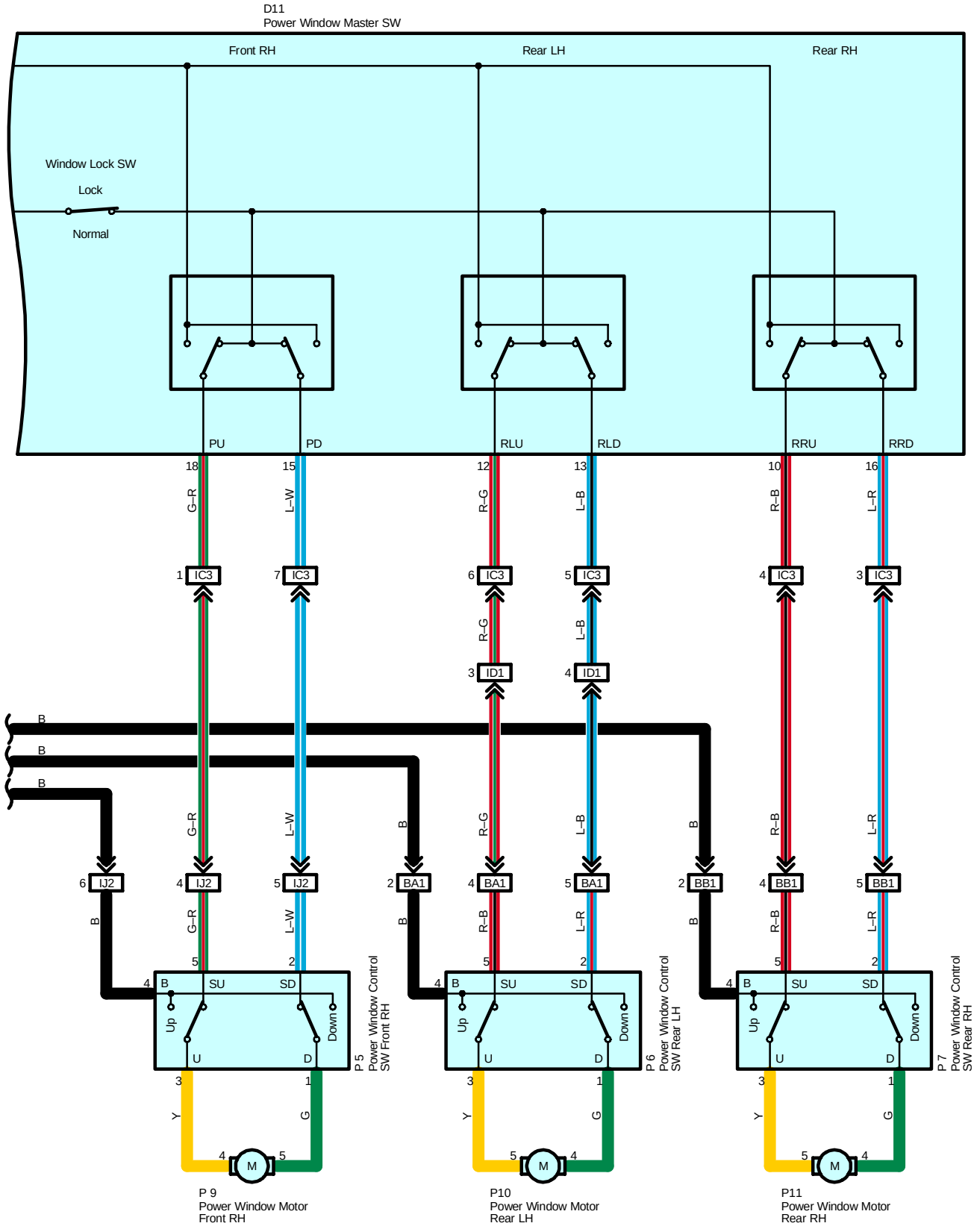
D11
Power Window Master SW
Front RH
Rear LH
Rear RH
Window Lock SW
Lock
Normal
PU
PD
RLU
RLD
RRU
RRD
IC3
ID1
IJ2
BA1
BB1
B
G–R
L–W
R–G
L–B
R–B
L–R
Up
Down
SU
SD
U
D
M
P 5
Power Window Control
SW Front RH
P 6
Power Window Control
SW Rear LH
P 7
Power Window Control
SW Rear RH
P 9
Power Window Motor
Front RH
P10
Power Window Motor
Rear LH
P11
Power Window Motor
Rear RH

Power Window

System Outline

When the ignition SW is turned on, the current flows through the GAUGE fuse to TERMINAL 1 of the P/W relay to TERMINAL 2 to GROUND. This activates the relay and the current flows through the POWER fuse to TERMINAL 5 of the relay to TERMINAL 3 to TERMINAL B of the power window master SW, TERMINAL 4 of the power window control SW.

1. Manual Operation (Driver's Window)

With the ignition SW turned on and with the power window master SW (Front LH) in Up position, the current flowing to TERMINAL B of the power window master SW flows to TERMINAL DU of the master SW to TERMINAL 4 of the power window motor to TERMINAL 5 to TERMINAL DD of the master SW to TERMINAL E to GROUND and rotates the power window motor in the up direction. The window ascends only while the SW is being pulled. In down operation, the flows of current from TERMINAL B of the power window master SW to TERMINAL DD to TERMINAL 5 of the motor to TERMINAL 4 to TERMINAL DU of the master SW to TERMINAL E to GROUND, flowing in the opposite direction to manual up operation and rotating the motor in reverse, thus opening the window.

2. Auto Down Operation (Driver's Window)

When the front LH window control SW in the power window master SW is pushed strongly on the down side, current flows from TERMINAL B of the master SW to TERMINAL DD to TERMINAL 5 of the power window motor to TERMINAL 4 to TERMINAL DU of the master SW to TERMINAL E to GROUND. Because the hold circuit inside the master SW keeps the relay on the down side activated, the power window motor continues operating even if the power window master SW is released. When the driver's window is fully opened, the hold circuit turns off and the relay on the down side turns off, and auto down operation is completed.

3. Stopping of Auto Down Operation (Driver's Window)

When the master SW (Front LH) is pulled to the up side during auto down operation, a ground circuit opens in the master SW and current does not flow from TERMINAL DU of the master SW to TERMINAL E, so the motor stops, causing auto down operation to stop. If the master SW is pulled continuously, the motor rotates in the up direction in manual up operation.

4. Manual Operation (Front RH Window)

With the power window control SW (Front RH) pulled to the up side, current flowing from TERMINAL 4 of the power window control SW flows to TERMINAL 3 to TERMINAL 4 of the power window motor to TERMINAL 5 to TERMINAL 1 of the power window control SW to TERMINAL 2 to TERMINAL PD of the master SW to TERMINAL E to GROUND and rotates the power window motor (Front RH) in the up direction. Up operation continues only while the power window control SW is pulled to the up side. When the window descends, the current flowing to the motor flows in the opposite direction, from TERMINAL 4 to TERMINAL 5, and the motor rotates in reverse. When the window lock SW is pushed to the lock side, the ground circuit to the passenger's window becomes open. As a result, even if Open/Close operation of the passenger's window is attempted, the current from TERMINAL E of the power window master SW is not grounded and the motor does not rotate, so the passenger's window can not be operated and window lock occurs.

5. Manual Operation (Rear LH, Rear RH Window)

With the power window control SW (Rear LH, rear RH) pulled to the up side, current flowing from TERMINAL 4 of the power window control SW flows to TERMINAL 3 to TERMINAL 5 of the power window motor to TERMINAL 4 to TERMINAL 1 of the power window control SW to TERMINAL 2 to TERMINAL RLD, RRD of the master SW to TERMINAL E to GROUND and rotates the power window motor (Rear LH, rear RH) in the up direction. Up operation continues only while the power window control SW is pulled to the up side. When the window descends, the current flowing to the motor flows in the opposite direction, from TERMINAL 5 to TERMINAL 4, and the motor rotates in reverse. When the window lock SW is pushed to the lock side, the ground circuit to the passenger's window becomes open. As a result, even if Open/Close operation of the passenger's window is attempted, the current from TERMINAL E of the power window master SW is not grounded and the motor does not rotate, so the passenger's window can not be operated and window lock occurs.

Service Hints

D11 Power Window Master SW

B–Ground : Approx. 12 volts with the ignition SW at ON position
DU–Ground : Approx. 12 volts with the ignition SW on and master SW (Front LH window) at Up position
DD–Ground : Approx. 12 volts with the ignition SW on and master SW (Front LH window) at Down or Auto Down position
E–Ground : Always continuity

Window Lock SW

Open with window lock SW at Lock position

: Parts Location

Code	See Page	Code	See Page	Code	See Page
D11	36	P6	37	P9	37
J6	35	P7	37	P10	37
P5	37	P8	37	P11	37

: Junction Block and Wire Harness Connector

Code	See Page	Junction Block and Wire Harness (Connector Location)
ID	25	Floor Wire and Instrument Panel J/B (Lower Finish Panel)
IF	25	Instrument Panel Wire and Instrument Panel J/B (Lower Finish Panel)
IG		
4B	30	Instrument Panel Wire and Center J/B (Behind the Combination Meter)

: Connector Joining Wire Harness and Wire Harness

Code	See Page	Joining Wire Harness and Wire Harness (Connector Location)
IC1	40	Front Door LH Wire and Instrument Panel Wire (Left Kick Panel)
IC3		
ID1	42	Instrument Panel Wire and Floor Wire (Left Kick Panel)
IJ2	42	Front Door RH Wire and Instrument Panel Wire (Right Kick Panel)
BA1	44	Rear Door LH Wire and Floor Wire (Left Center Pillar)
BB1	44	Rear Door RH Wire and Instrument Panel Wire (Right Center Pillar)

: Ground Points

Code	See Page	Ground Points Location
IE	40	Behind the Combination Meter

: Splice Points

Code	See Page	Wire Harness with Splice Points	Code	See Page	Wire Harness with Splice Points
B4	44	Front Door LH Wire			

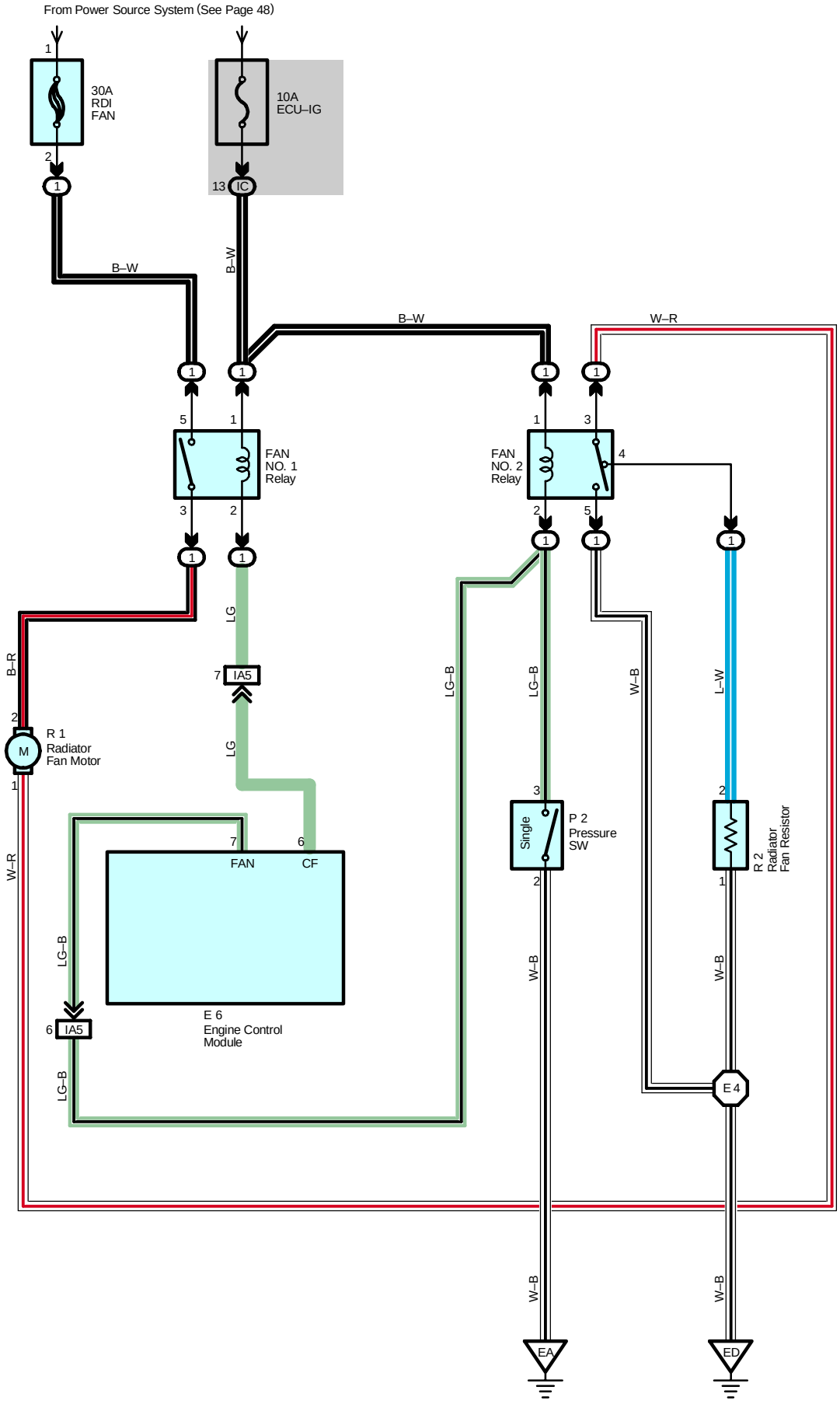
From Power Source System (See Page 48)
30A
RDI
FAN
10A
ECU–IG
13 IC
B–W
B–W
B–W
W–R
FAN
NO. 1
Relay
FAN
NO. 2
Relay
B–R
R 1
Radiator
Fan Motor
LG
LG
7 IA5
LG–B
LG–B
W–B
L–W
W–R
7
FAN
6
CF
E 6
Engine Control
Module
6 IA5
LG–B
Single
P 2
Pressure
SW
R 2
Radiator
Fan Resistor
E 4
W–B
W–B
W–B
W–B
EA
ED

System Outline

The current is applied at all times through the RDI FAN fuse to TERMINAL 5 of the FAN NO.1 relay.
When the ignition SW is turned on, the current flows through the ECU–IG fuse to FAN NO.1 relay (Coil side) to TERMINAL 6 of the engine control module. At the same time as this current flow, the current from ECU–IG fuse flows to the FAN NO.2 relay (Coil side) to TERMINAL 3 of the pressure SW.

1. Low Speed Operation

When the A/C system is operating, the FAN NO.1 Relay is turned on. As a result, the current flows from the RDI FAN fuse to FAN NO.1 relay (Point side) to TERMINAL 2 of the radiator fan motor to TERMINAL 1 to TERMINAL 3 of the FAN NO.2 relay to TERMINAL 4 to TERMINAL 2 of the radiator fan resistor to TERMINAL 1 to GROUND, and the radiator fan motor rotates at low speed.

2. High Speed Operation

When the pressure SW is on or engine control module operated, the FAN NO.1 and NO.2 relay is turned on. As a result, the current flows from the RDI FAN fuse to FAN NO.1 relay (Point side) to radiator fan motor to TERMINAL 3 of the FAN NO.2 Relay to TERMINAL 5 to GROUND, and the radiator fan motor rotates at high speed.

Service Hints

P2 Pressure SW

3–2 : Open below approx. 12.5 kgf/cm^2 (178 psi, 1225 kpa)
Close above approx. 15.5 kgf/cm^2 (220 psi, 1520 kpa)

: Parts Location

Code	See Page	Code	See Page	Code	See Page
E6	34	R1	33		
P2	33	R2	33		

: Relay Blocks

Code	See Page	Relay Blocks (Relay Block Location)
1	22	Engine Room R/B (Engine Compartment Left)

: Junction Block and Wire Harness Connector

Code	See Page	Junction Block and Wire Harness (Connector Location)
IC	25	Engine Room Main Wire and Instrument Panel J/B (Lower Finish Panel)

: Connector Joining Wire Harness and Wire Harness

Code	See Page	Joining Wire Harness and Wire Harness (Connector Location)
IA5	40	Engine Room Main Wire and Instrument Panel Wire (Left Side of the Instrument Panel Reinforcement)

: Ground Points

Code	See Page	Ground Points Location
EA	38	Front Right Fender
ED	38	Front Left Suspension Tower

: Splice Points

Code	See Page	Wire Harness with Splice Points	Code	See Page	Wire Harness with Splice Points
E4	38	Engine Room Main Wire			

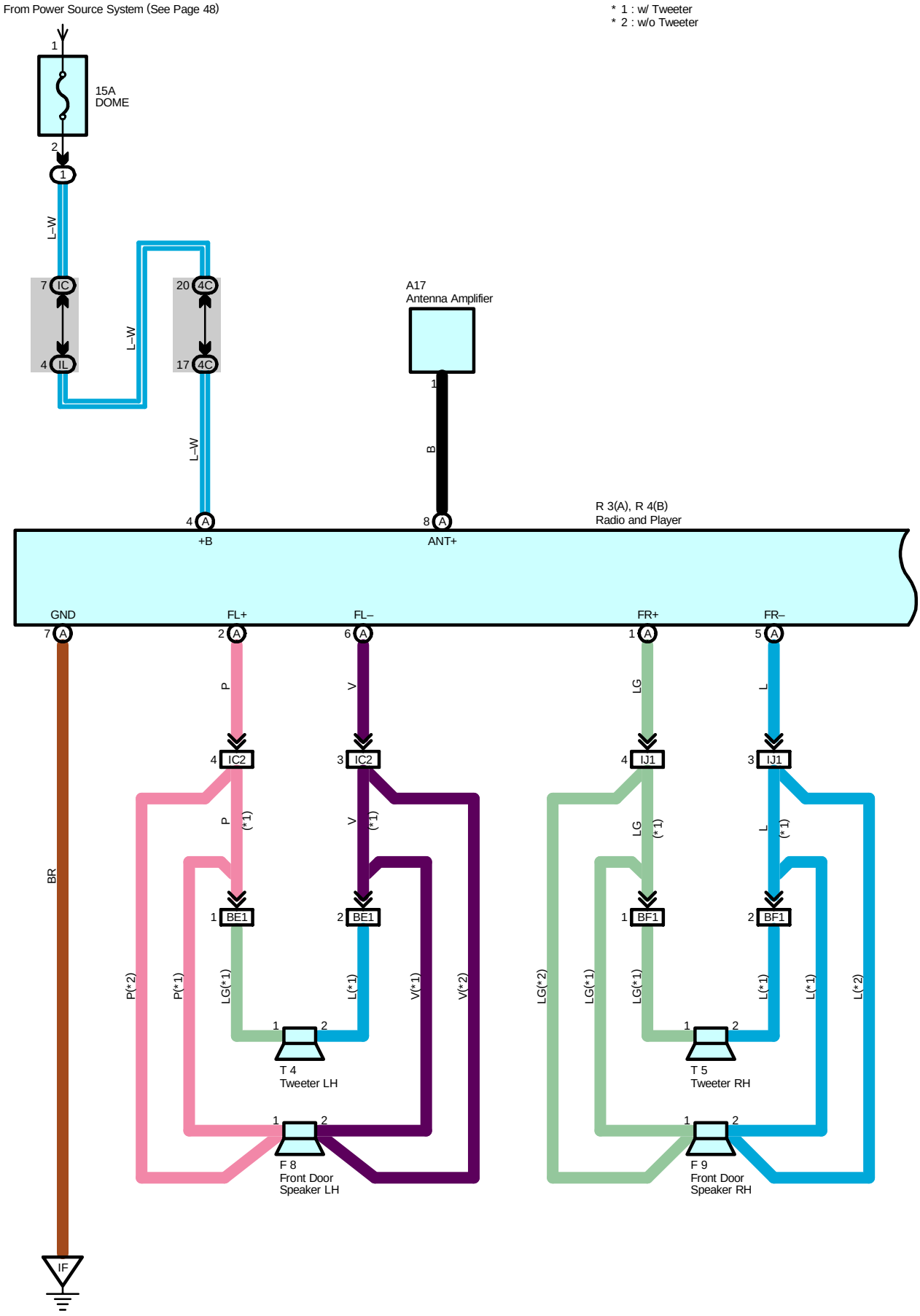
From Power Source System (See Page 48)
* 1 : w/ Tweeter
* 2 : w/o Tweeter
15A
DOME
L–W
A17
Antenna Amplifier
B
R 3(A), R 4(B)
Radio and Player
+B
ANT+
GND
FL+
FL–
FR+
FR–
BR
P
V
LG
L
IC2
IJ1
BE1
BF1
(*1)
P(*2)
P(*1)
LG(*1)
L(*1)
V(*1)
V(*2)
LG(*2)
L(*2)
T 4
Tweeter LH
T 5
Tweeter RH
F 8
Front Door
Speaker LH
F 9
Front Door
Speaker RH
IF

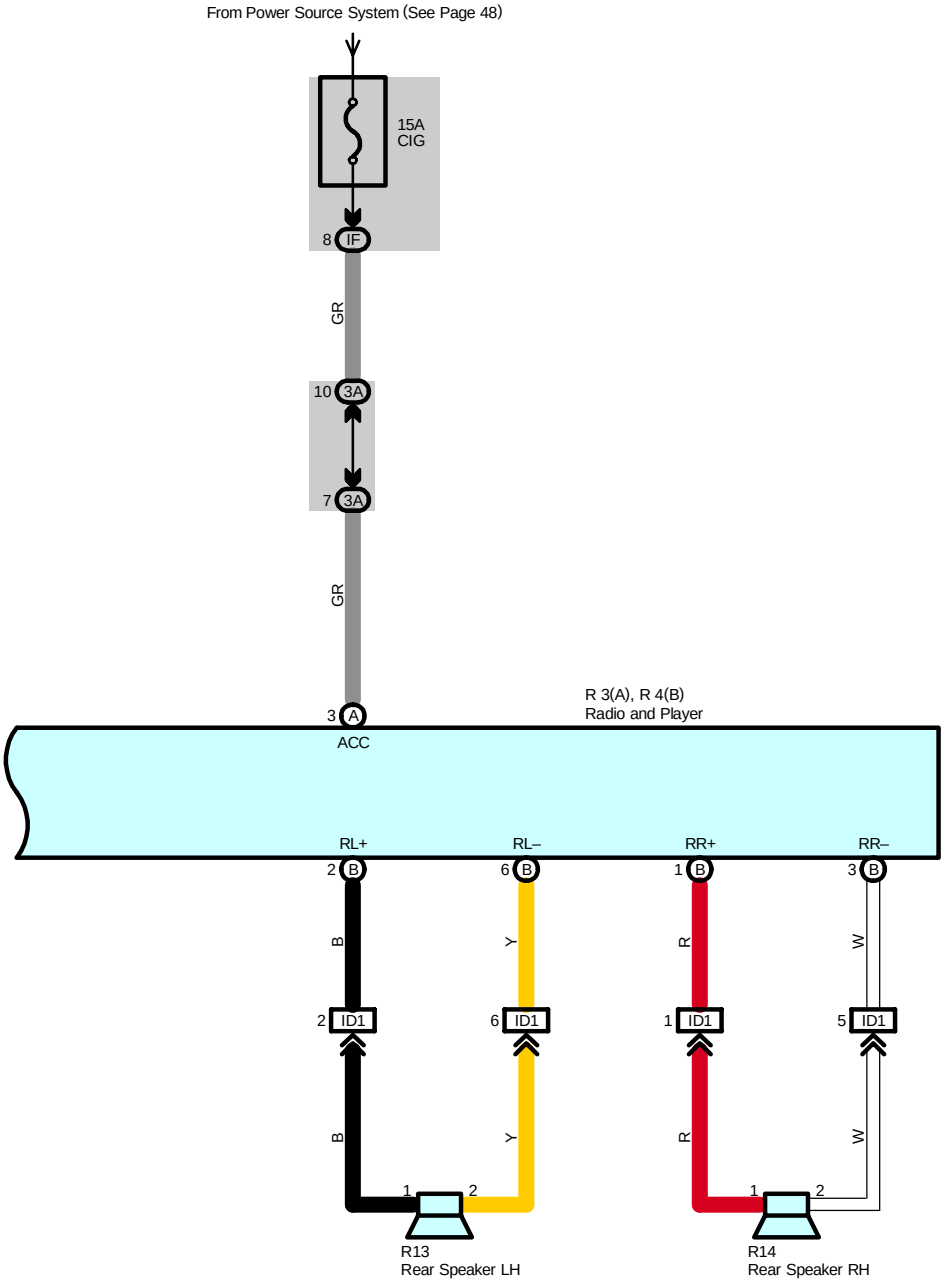
From Power Source System (See Page 48)
15A
CIG
8 IF
GR
10 3A
7 3A
GR
3 A
ACC
R 3(A), R 4(B)
Radio and Player
RL+
RL–
RR+
RR–
2 B
6 B
1 B
3 B
B
Y
R
W
2 ID1
6 ID1
1 ID1
5 ID1
B
Y
R
W
1
2
1
2
R13
Rear Speaker LH
R14
Rear Speaker RH

Radio and Player

Service Hints

R3 (A) Radio and Player

(A) 4–Ground : Always approx. 12 volts
(A) 3–Ground : Approx. 12 volts with the ignition SW at ACC or ON position
(A) 7–Ground : Always continuity

: Parts Location

Code	See Page	Code		See Page	Code	See Page
A17	34	R3	A	35	R14	37
F8	36	R4	B	35	T4	37
F9	36	R13		37	T5	37

: Relay Blocks

Code	See Page	Relay Blocks (Relay Block Location)
1	22	Engine Room R/B (Engine Compartment Left)

: Junction Block and Wire Harness Connector

Code	See Page	Junction Block and Wire Harness (Connector Location)
IC	25	Engine Room Main Wire and Instrument Panel J/B (Lower Finish Panel)
IF	25	Instrument Panel Wire and Instrument Panel J/B (Lower Finish Panel)
IL	24	
3A	28	Instrument Panel Wire and RH J/B (Right Side of the Instrument Panel Reinforcement)
4C	30	Instrument Panel Wire and Center J/B (Behind the Combination Meter)

: Connector Joining Wire Harness and Wire Harness

Code	See Page	Joining Wire Harness and Wire Harness (Connector Location)
IC2	40	Front Door LH Wire and Instrument Panel Wire (Left Kick Panel)
ID1	42	Instrument Panel Wire and Floor Wire (Left Kick Panel)
IJ1	42	Front Door RH Wire and Instrument Panel Wire (Right Kick Panel)
BE1	44	Speaker Tweeter LH Wire and Front Door LH Wire (Inside of the Front Door LH)
BF1	44	Speaker Tweeter RH Wire and Front Door RH Wire (Inside of the Front Door RH)

: Ground Points

Code	See Page	Ground Points Location
IF	40	Behind the Combination Meter

Rear Window Defogger

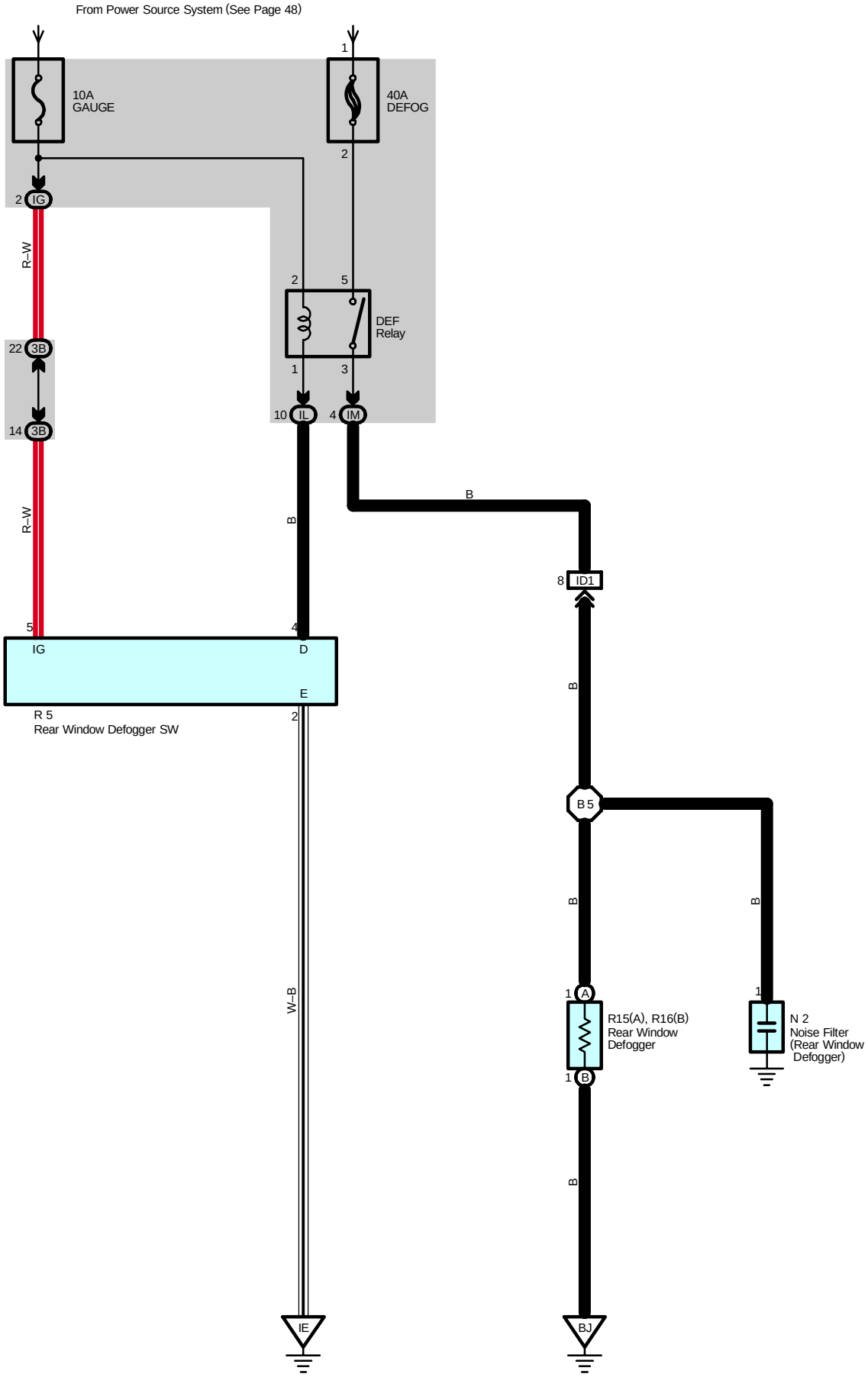

Service Hints

DEF Relay

5–3 : Closed with the ignition SW at ON position and the rear window defogger SW on

: Parts Location

Code	See Page	Code		See Page	Code	See Page
N2	37	R15	A	37		
R5	35	R16	B	37		

: Junction Block and Wire Harness Connector

Code	See Page	Junction Block and Wire Harness (Connector Location)
IG	25	Instrument Panel Wire and Instrument Panel J/B (Lower Finish Panel)
IL	24	
IM		
3B	28	Instrument Panel Wire and RH J/B (Right Side of the Instrument Panel Reinforcement)

: Connector Joining Wire Harness and Wire Harness

Code	See Page	Joining Wire Harness and Wire Harness (Connector Location)
ID1	42	Instrument Panel Wire and Floor Wire (Left Kick Panel)

: Ground Points

Code	See Page	Ground Points Location
IE	40	Behind the Combination Meter
BJ	44	Under the Right Quarter Pillar

: Splice Points

Code	See Page	Wire Harness with Splice Points	Code	See Page	Wire Harness with Splice Points
B5	44	Floor Wire			

F RELAY LOCATIONS

[Engine Compartment]

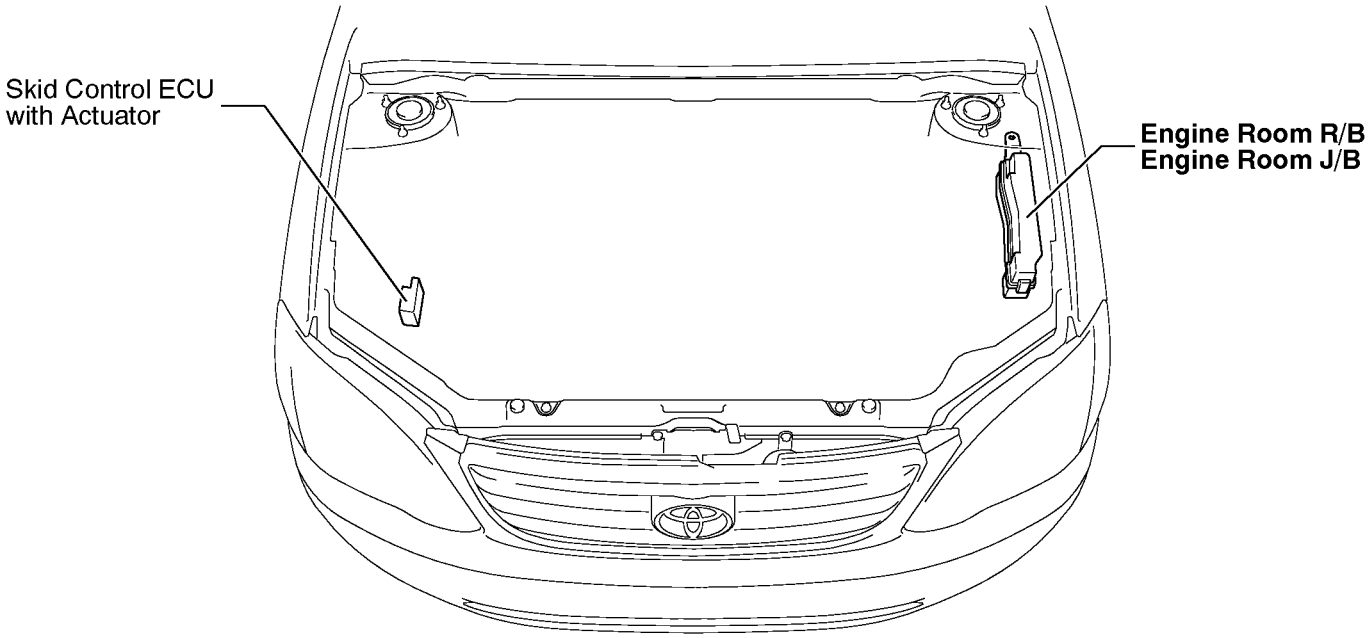

[Body]

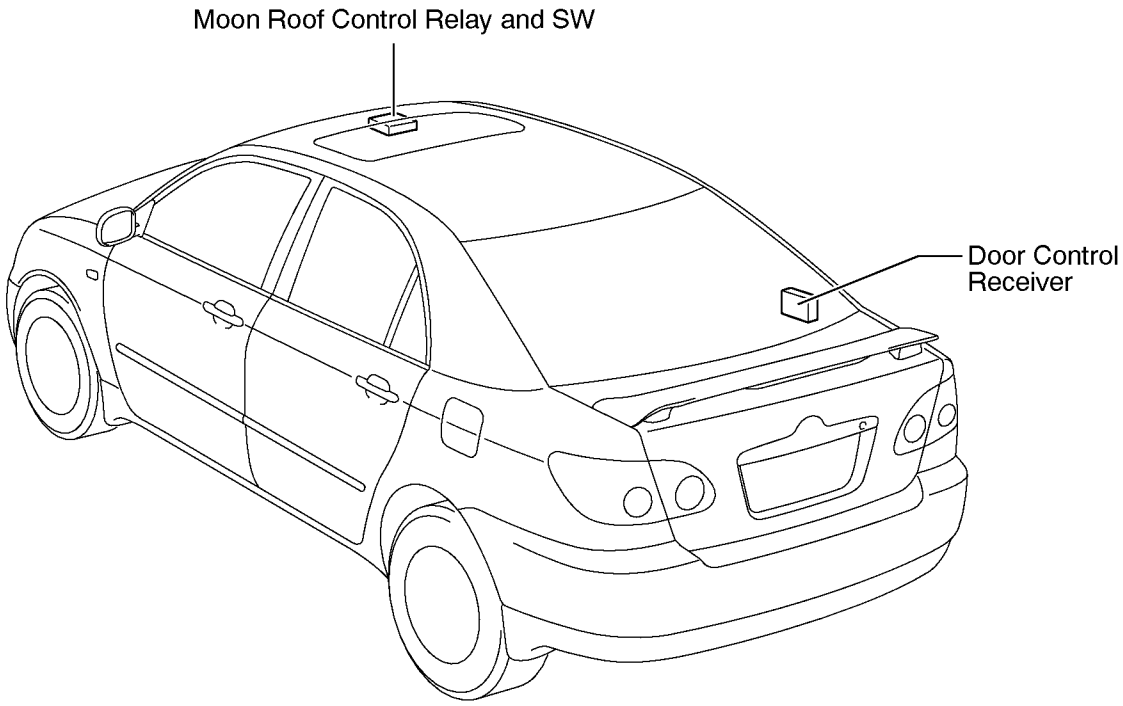

[Instrument Panel]

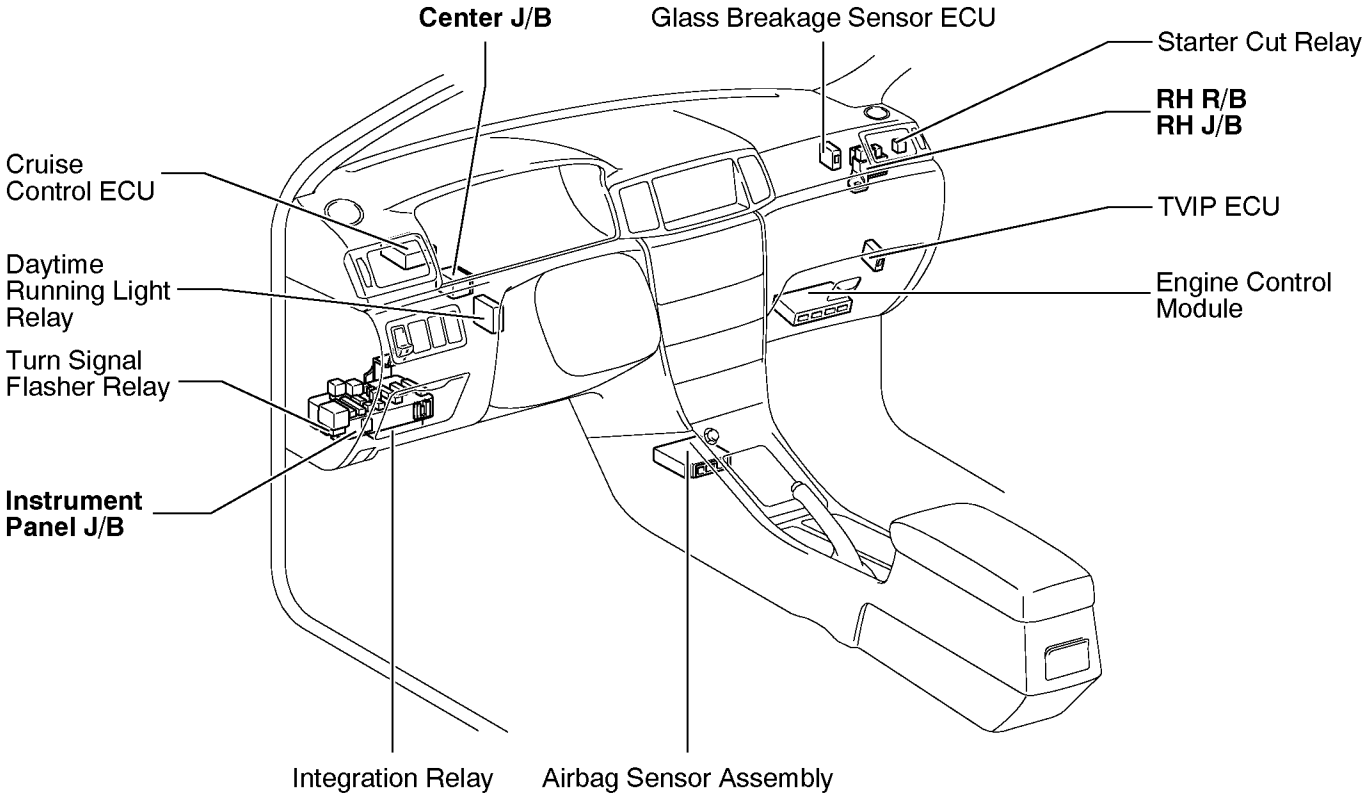

F RELAY LOCATIONS

① : Engine Room R/B ⬭ : Engine Room J/B	Engine Compartment Left (See Page 20)

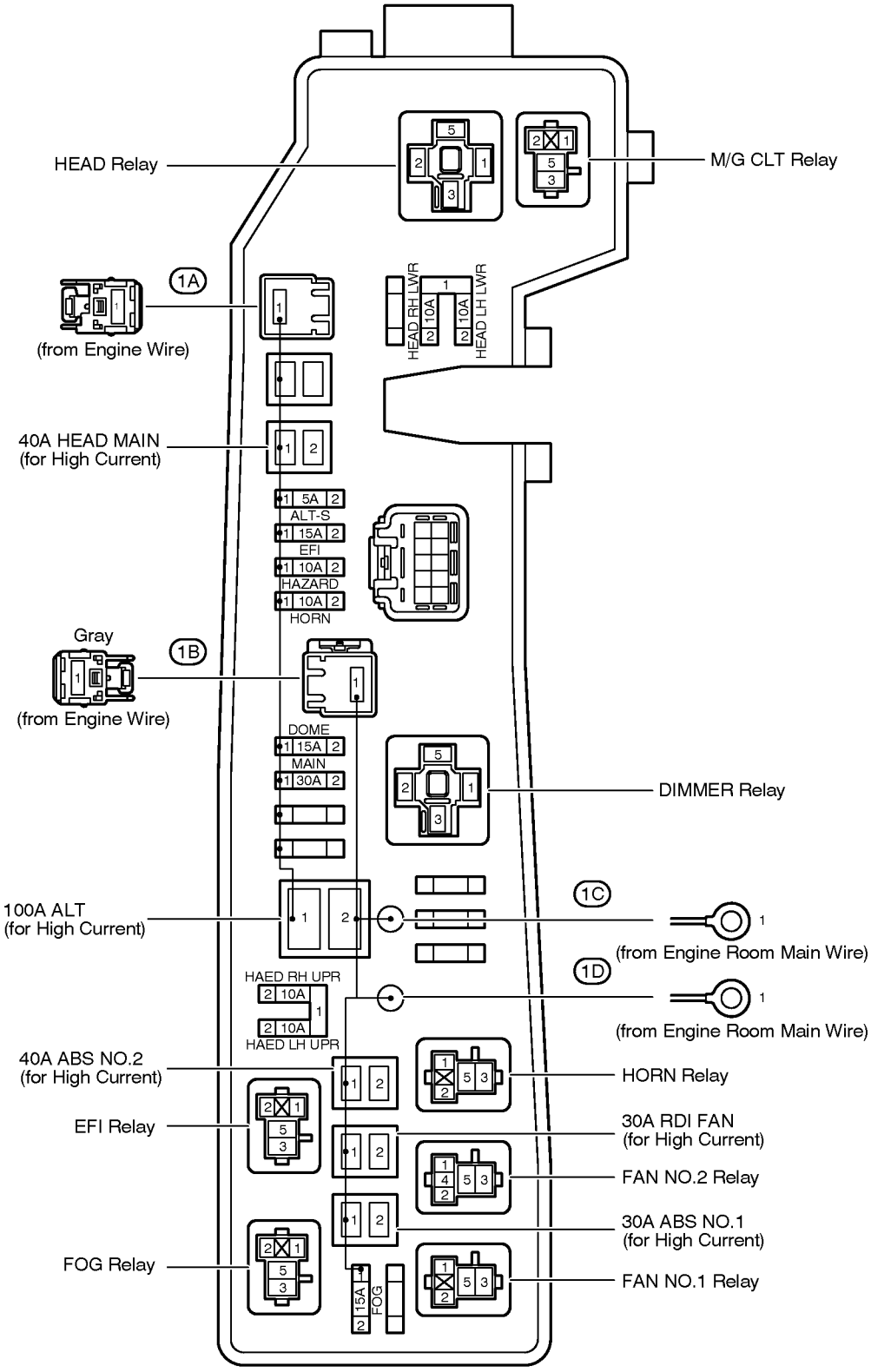

F RELAY LOCATIONS

: Instrument Panel J/B	Lower Finish Panel (See Page 21)

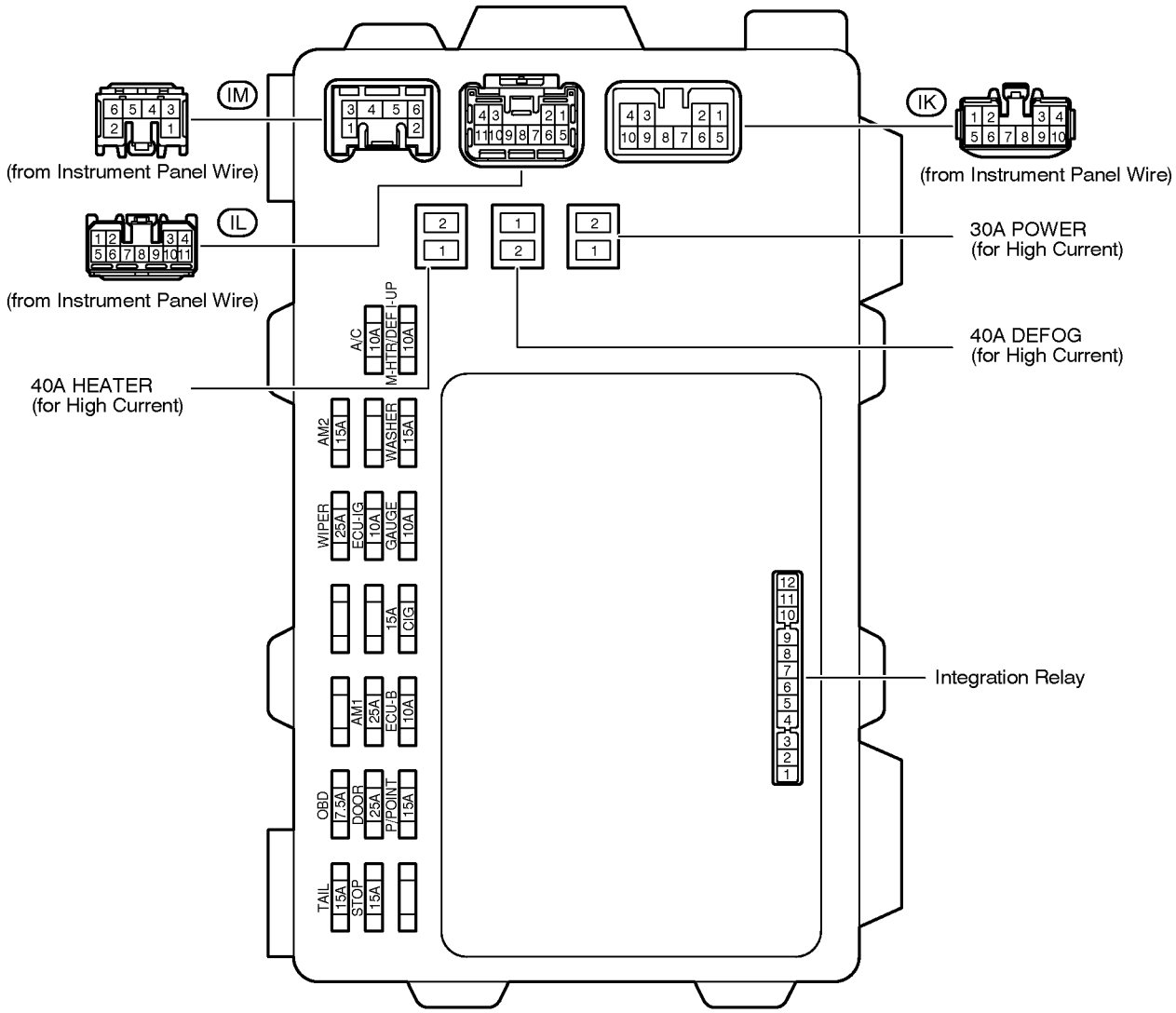

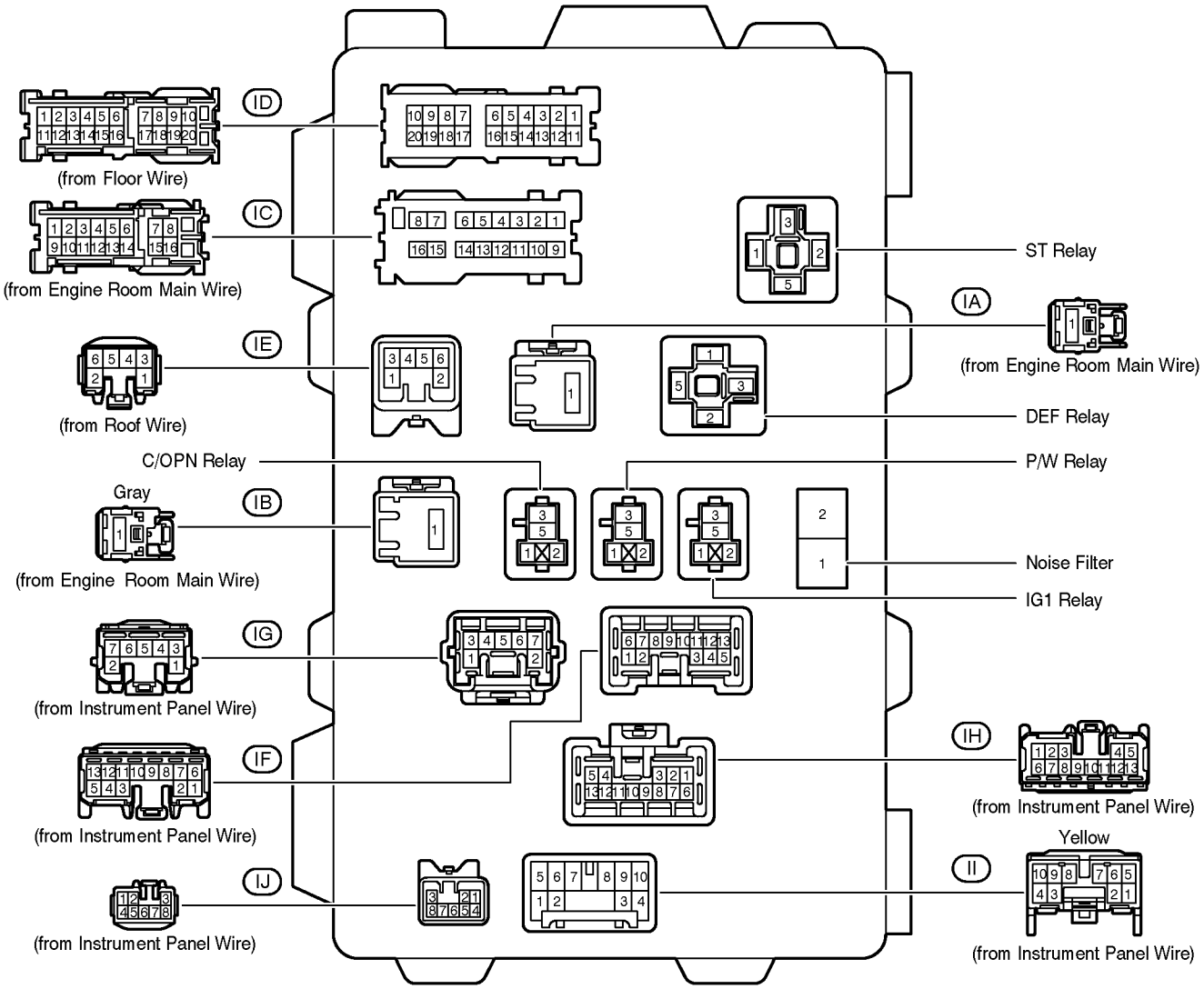
ID
(from Floor Wire)
IC
(from Engine Room Main Wire)
IE
(from Roof Wire)
C/OPN Relay
Gray
IB
(from Engine Room Main Wire)
IG
(from Instrument Panel Wire)
IF
(from Instrument Panel Wire)
IJ
(from Instrument Panel Wire)
ST Relay
IA
(from Engine Room Main Wire)
DEF Relay
P/W Relay
Noise Filter
IG1 Relay
IH
(from Instrument Panel Wire)
Yellow
II
(from Instrument Panel Wire)

[Instrument Panel J/B Inner Circuit]

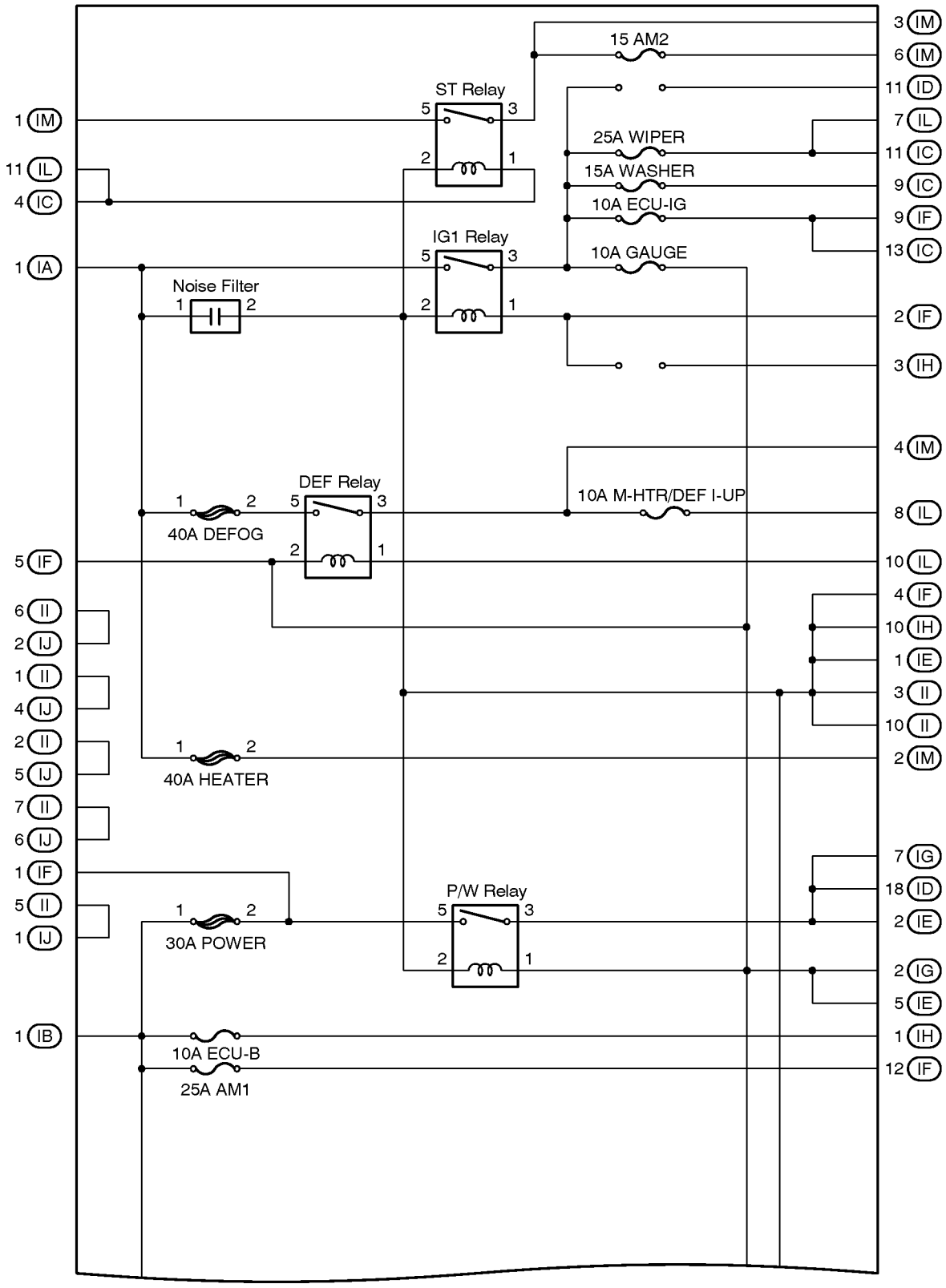

(Cont. Next Page)

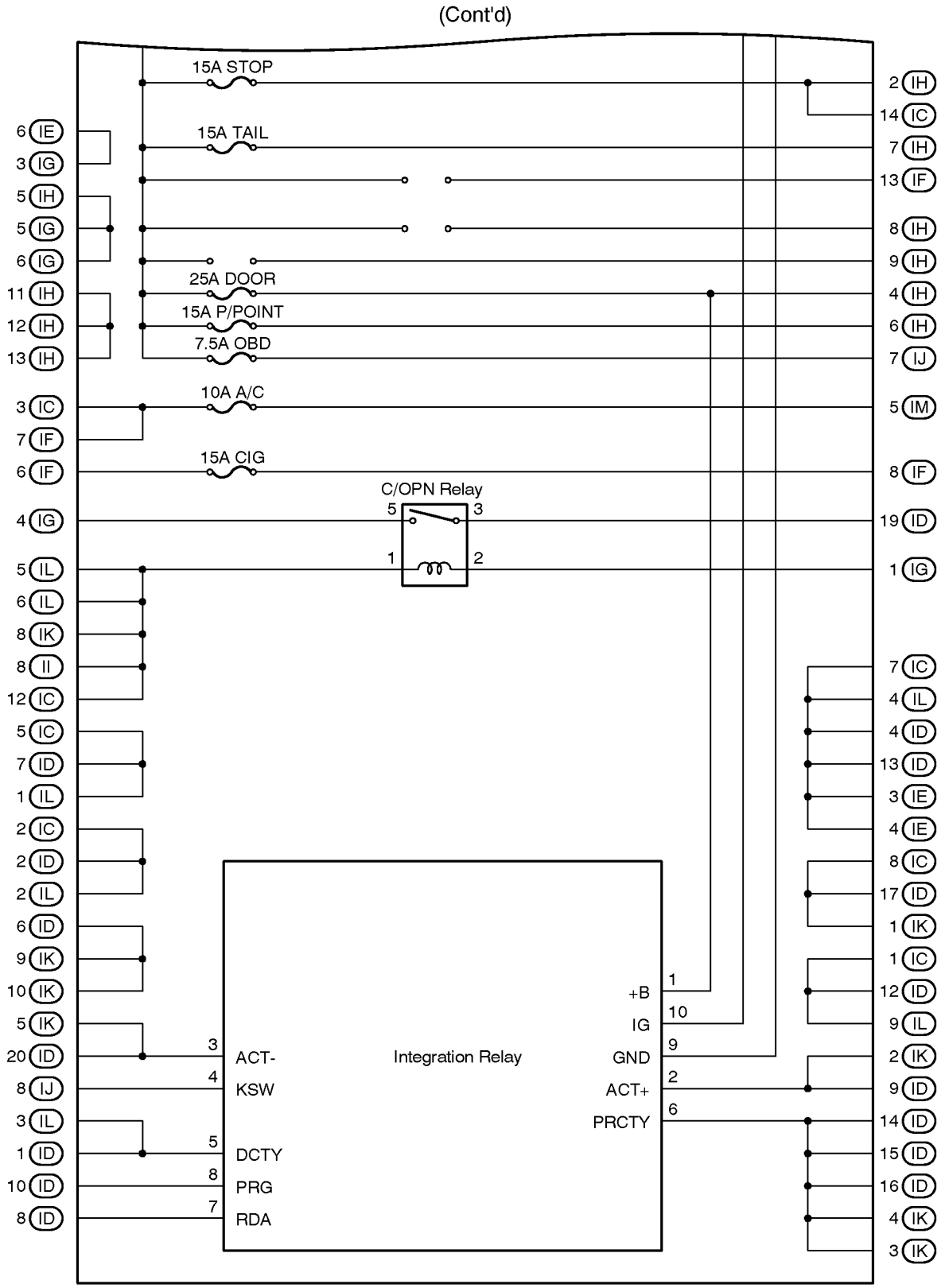
(Cont'd)
15A STOP
15A TAIL
25A DOOR
15A P/POINT
7.5A OBD
10A A/C
15A CIG
C/OPN Relay
Integration Relay
ACT-
KSW
DCTY
PRG
RDA
+B
IG
GND
ACT+
PRCTY

F RELAY LOCATIONS

③ : RH R/B ⬭ : RH J/B	Right Side of the Instrument Panel Reinforcement (See Page 21)

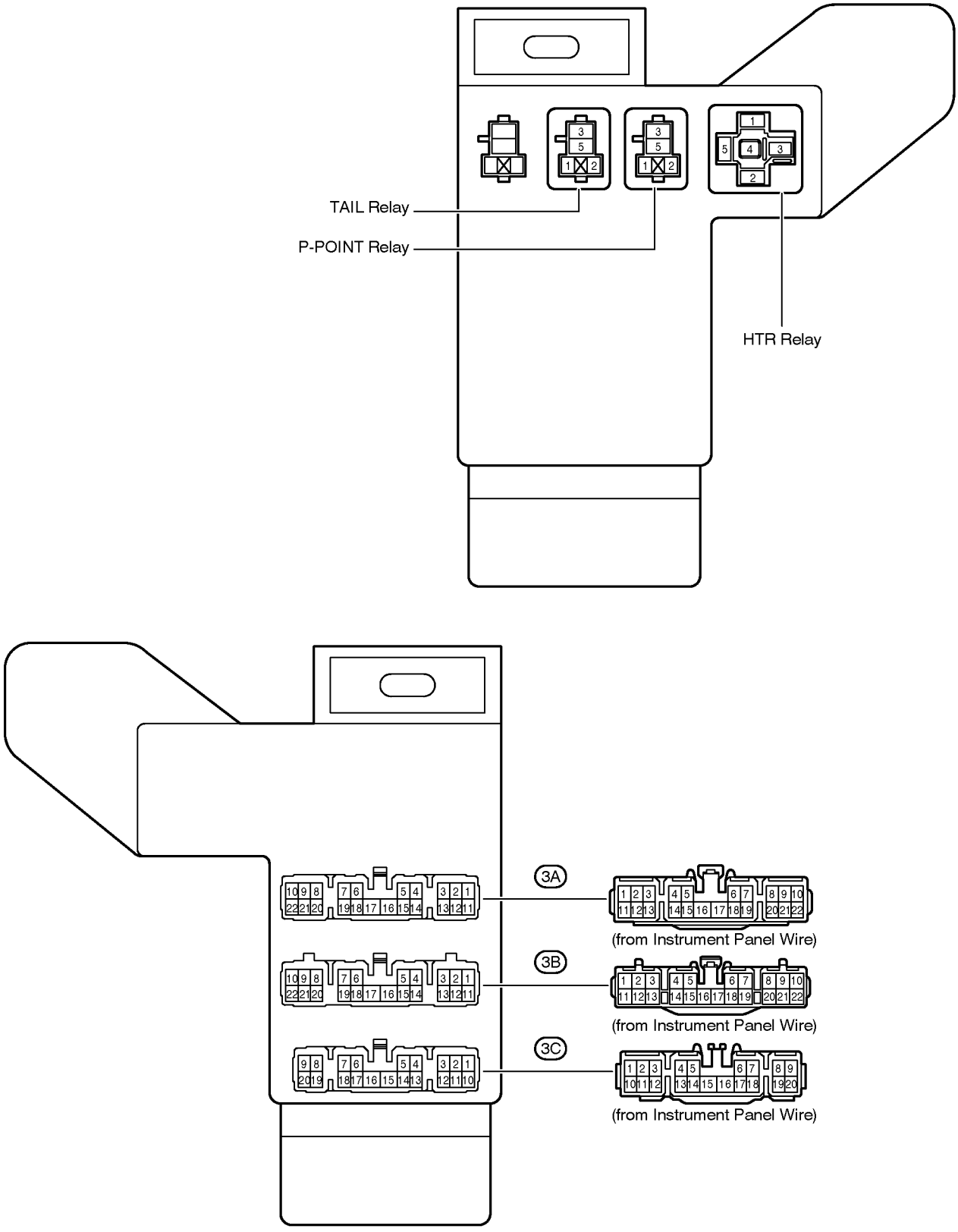

[RH J/B Inner Circuit]

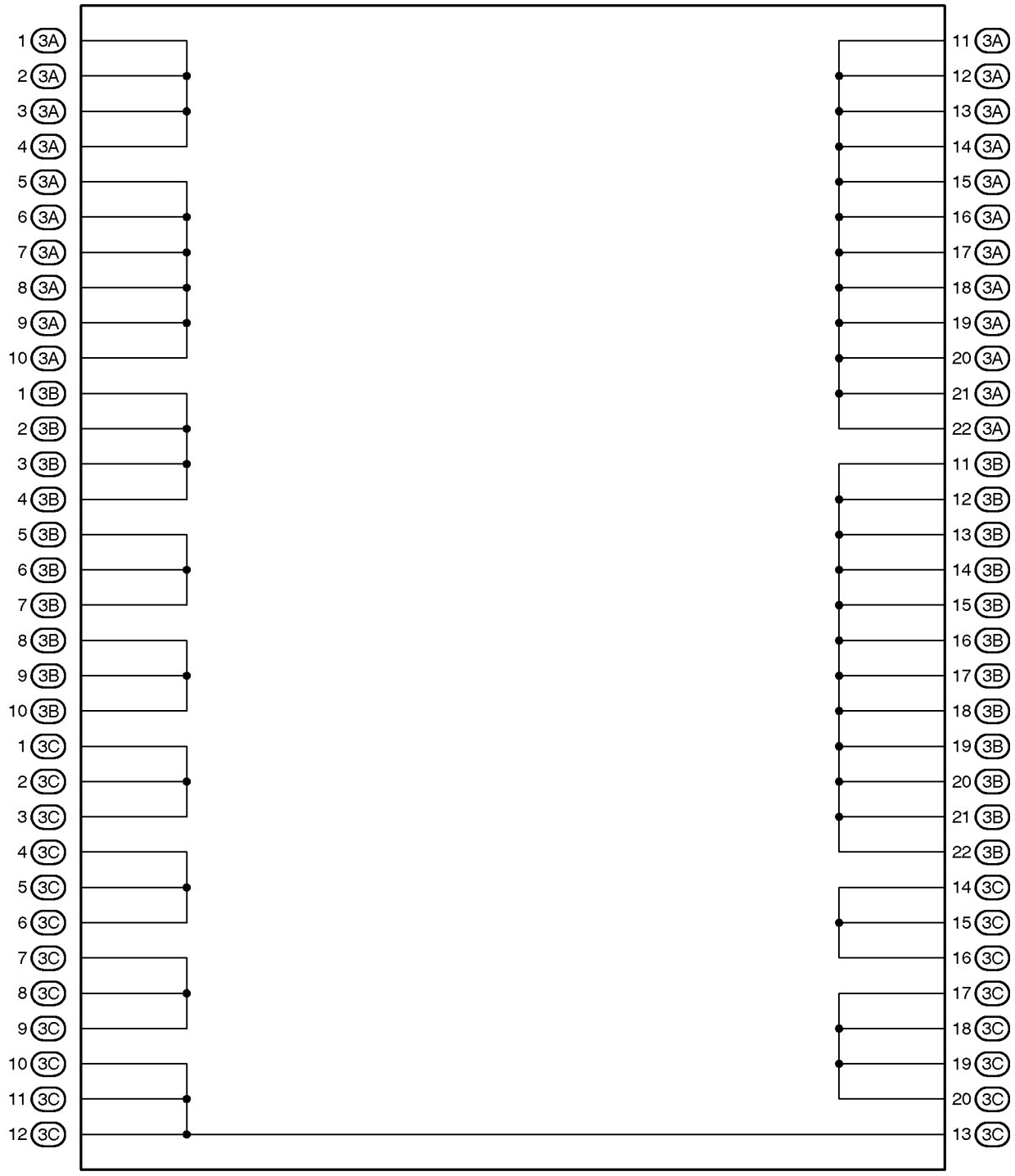

F RELAY LOCATIONS

: Center J/B	Behind the Combination Meter (See Page 21)

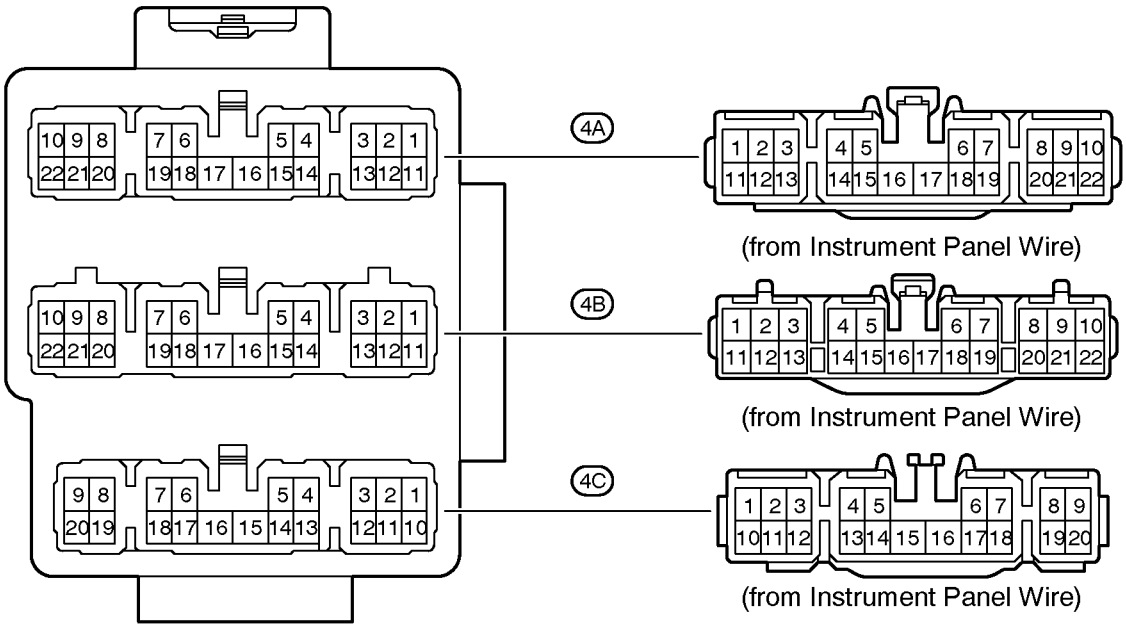

[Center J/B Inner Circuit]

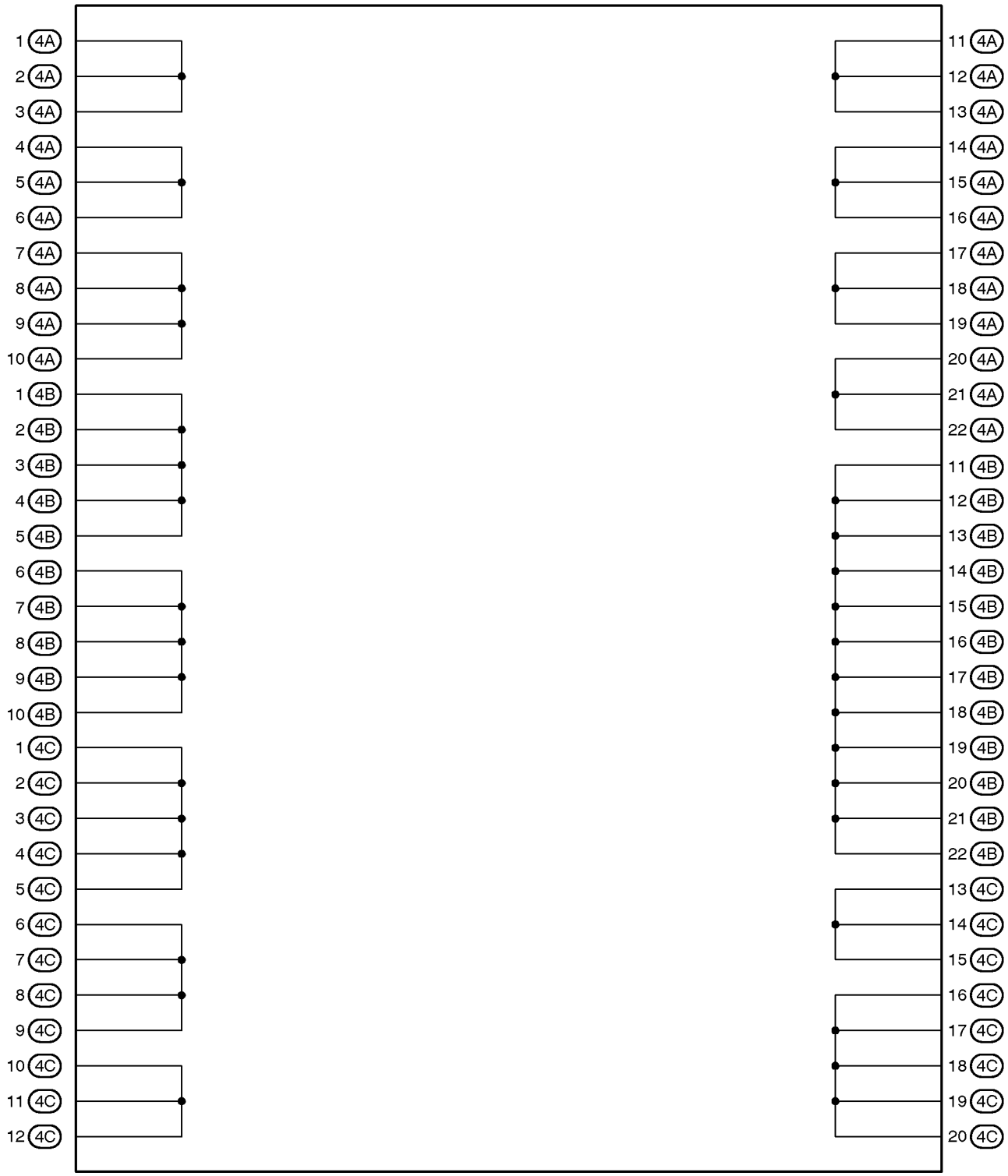

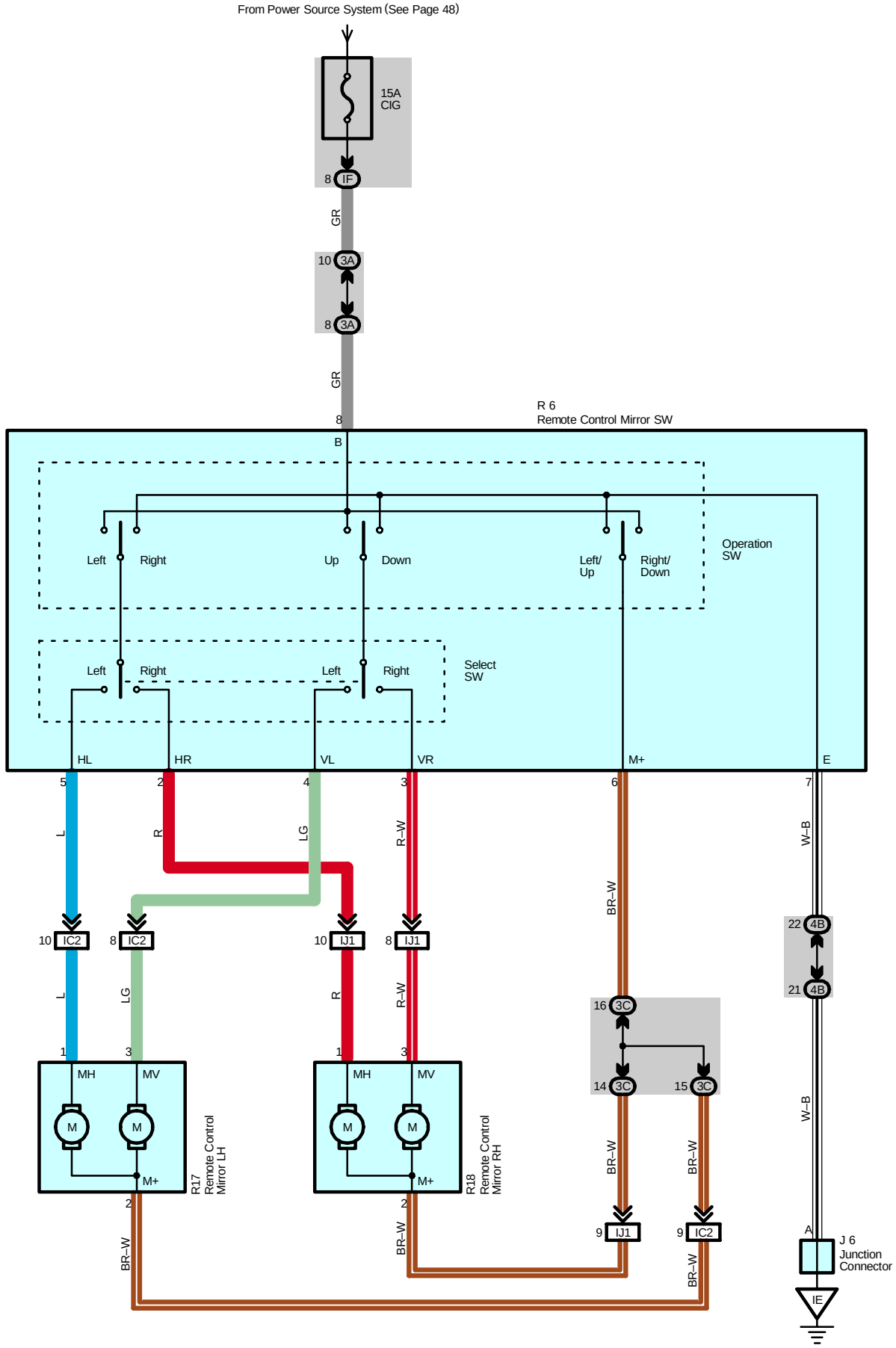
From Power Source System (See Page 48)
15A
CIG
8 IF
GR
10 3A
8 3A
GR
8
B
R 6
Remote Control Mirror SW
Left
Right
Up
Down
Left/
Up
Right/
Down
Operation
SW
Left
Right
Left
Right
Select
SW
HL
HR
VL
VR
M+
E
5
2
4
3
6
7
L
R
LG
R–W
BR–W
W–B
10 IC2
8 IC2
10 IJ1
8 IJ1
22 4B
21 4B
L
LG
R
R–W
16 3C
1
3
1
3
MH
MV
MH
MV
M
M
M
M
M+
M+
R17
Remote Control
Mirror LH
R18
Remote Control
Mirror RH
14 3C
15 3C
BR–W
BR–W
2
2
BR–W
BR–W
9 IJ1
9 IC2
A
J 6
Junction
Connector
BR–W
IE

Service Hints

R6 Remote Control Mirror SW

8–6 : Continuity with the operation SW at Down or Right position
6–7 : Continuity with the operation SW at Up or Left position
8–Ground : Approx. 12 volts with the ignition SW at ACC or ON position
7–Ground : Always continuity

: Parts Location

Code	See Page	Code	See Page	Code	See Page
J6	35	R17	37		
R6	35	R18	37		

: Junction Block and Wire Harness Connector

Code	See Page	Junction Block and Wire Harness (Connector Location)
IF	25	Instrument Panel Wire and Instrument Panel J/B (Lower Finish Panel)
3A	28	Instrument Panel Wire and RH J/B (Right Side of the Instrument Panel Reinforcement)
3C		
4B	30	Instrument Panel Wire and Center J/B (Behind the Combination Meter)

: Connector Joining Wire Harness and Wire Harness

Code	See Page	Joining Wire Harness and Wire Harness (Connector Location)
IC2	40	Front Door LH Wire and Instrument Panel Wire (Left Kick Panel)
IJ1	42	Front Door RH Wire and Instrument Panel Wire (Right Kick Panel)

: Ground Points

Code	See Page	Ground Points Location
IE	40	Behind the Combination Meter

G ELECTRICAL WIRING ROUTING

▭ : Location of Connector Joining Wire Harness and Wire Harness
▽ : Location of Ground Points

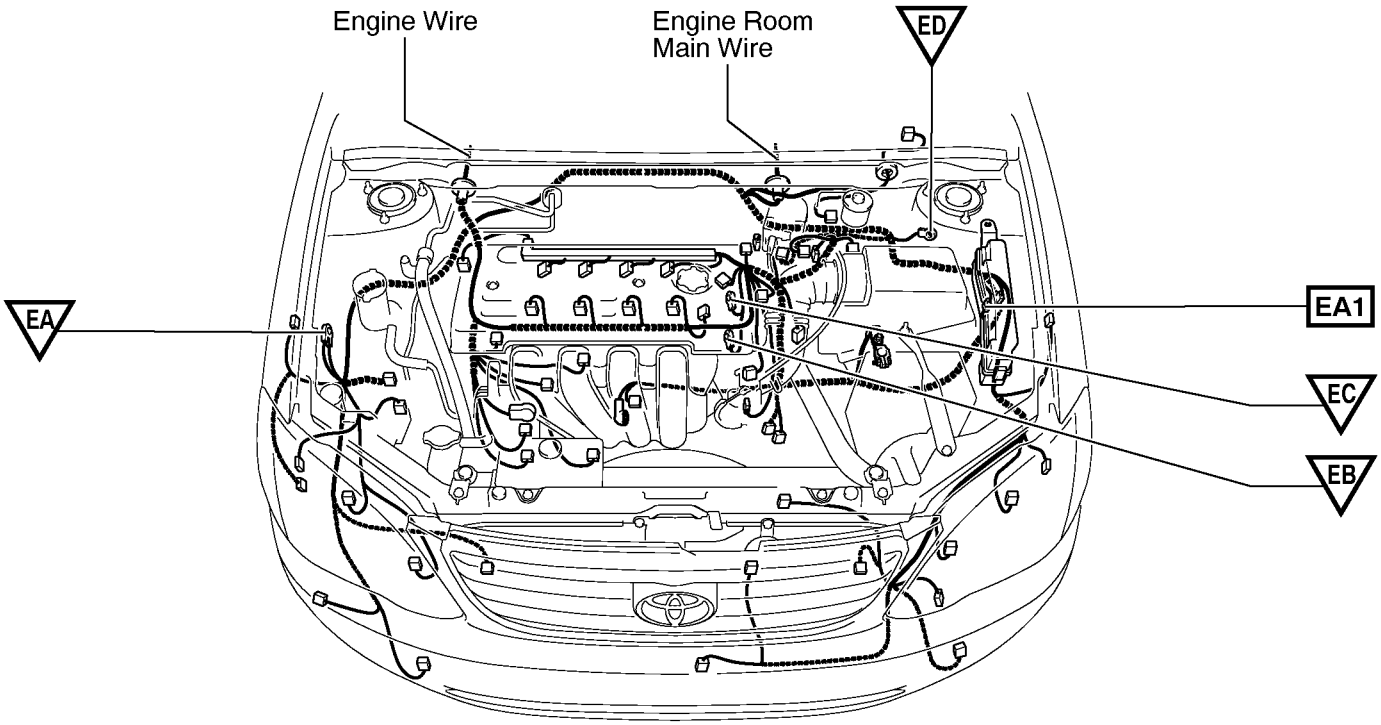

⬡ : Location of Splice Points

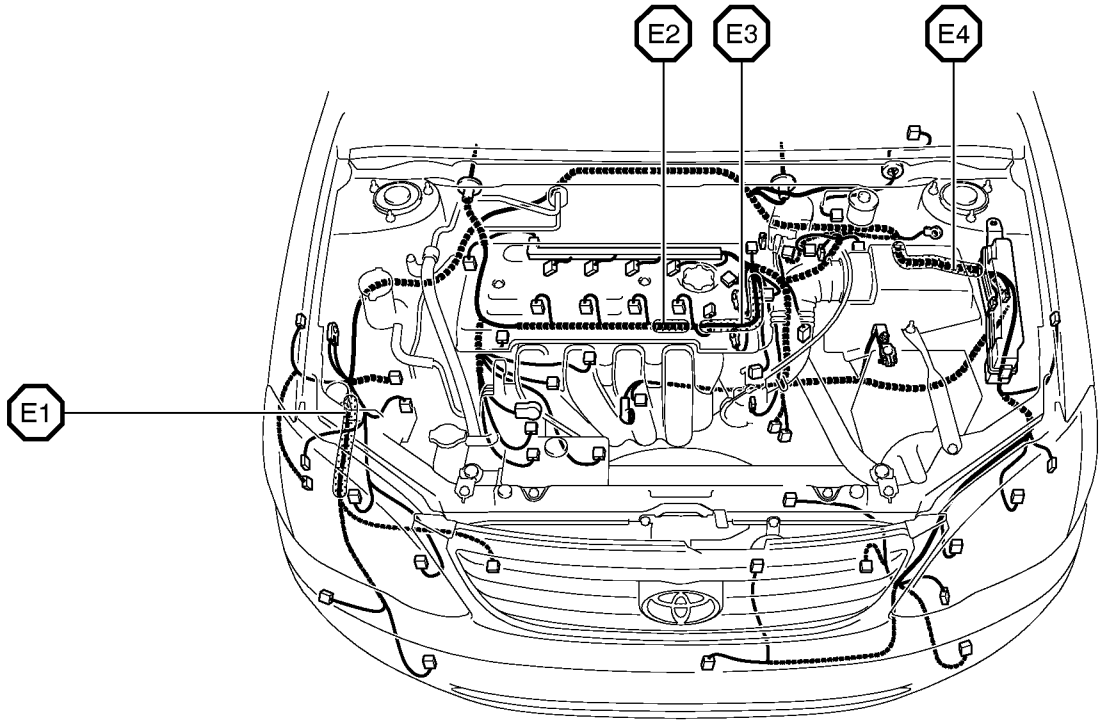

Connector Joining Wire Harness and Wire Harness

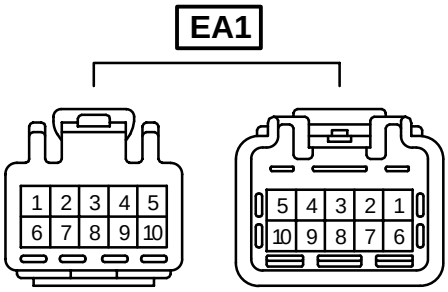

Code	Joining Wire Harness and Wire Harness (Connector Location)
EA1	Engine Wire and Engine Room Main Wire (Inside of the Engine Room R/B)

▭ : Location of Connector Joining Wire Harness and Wire Harness

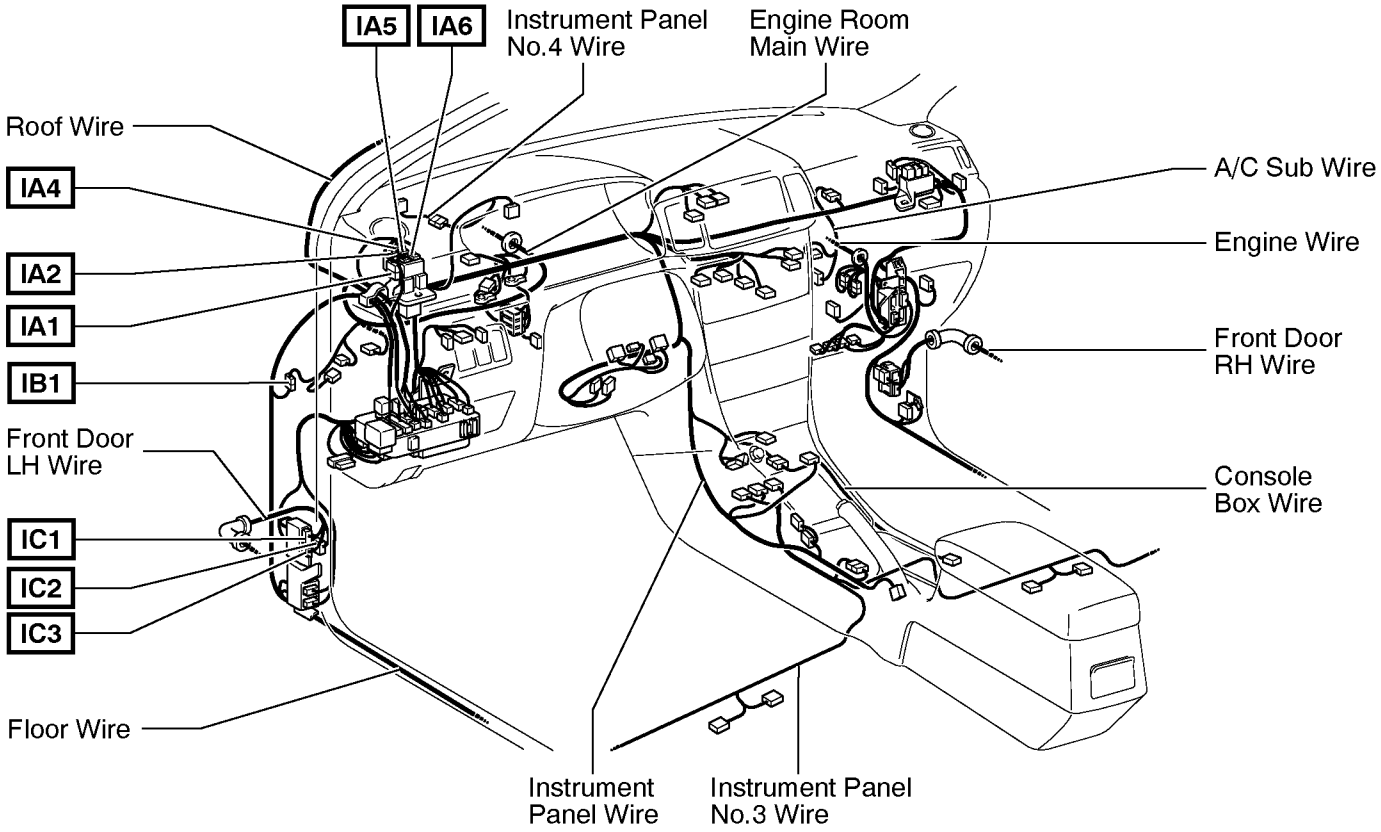

▽ : Location of Ground Points

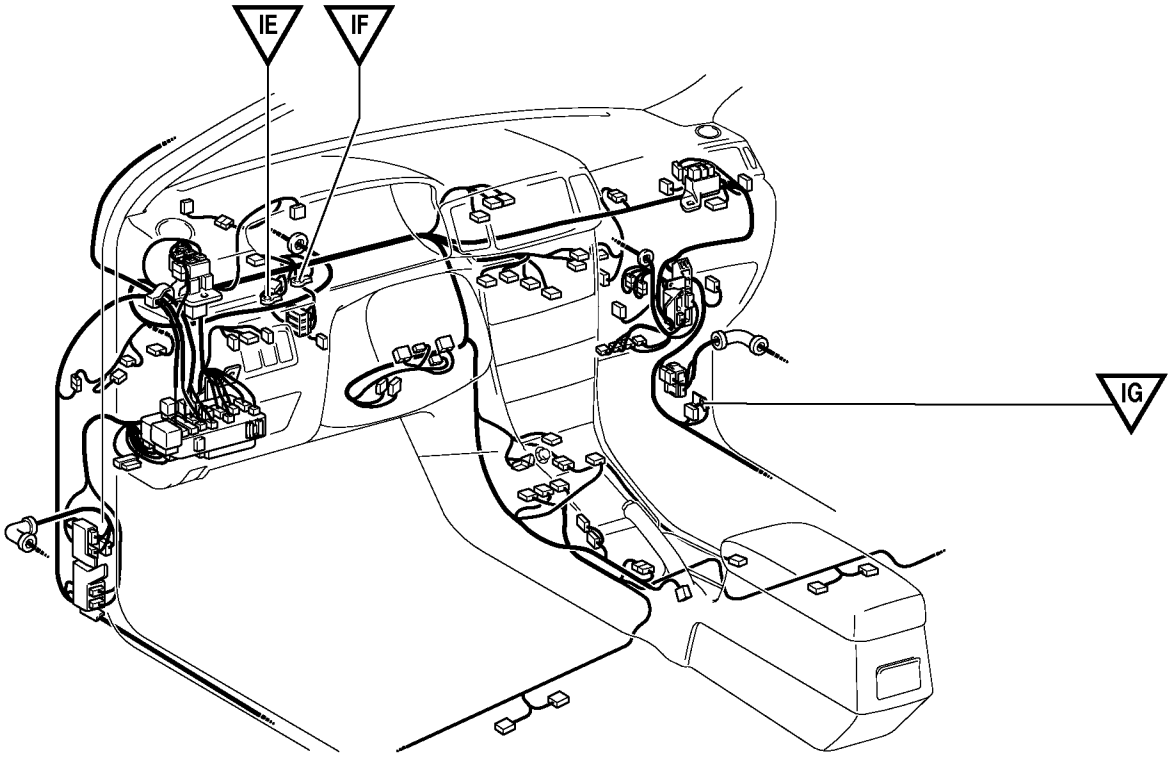

Connector Joining Wire Harness and Wire Harness

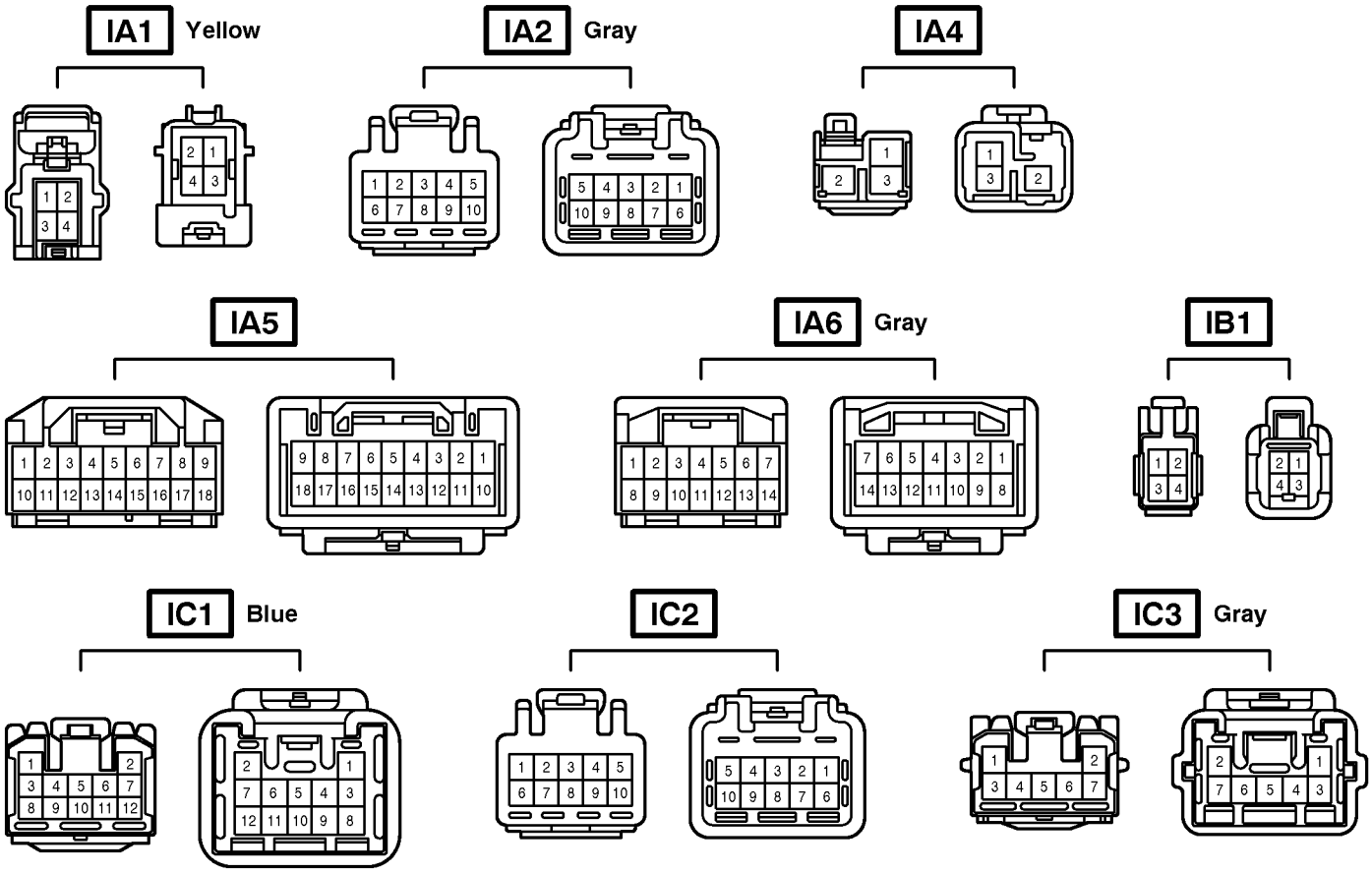

Code	Joining Wire Harness and Wire Harness (Connector Location)
IA1	Engine Room Main Wire and Instrument Panel Wire (Left Side of the Instrument Panel Reinforcement)
IA2	
IA4	
IA5	
IA6	
IB1	Engine Room Main Wire and Floor Wire (Cowl Side Panel LH)
IC1	Front Door LH Wire and Instrument Panel Wire (Left Kick Panel)
IC2	
IC3	

▭ : Location of Connector Joining Wire Harness and Wire Harness

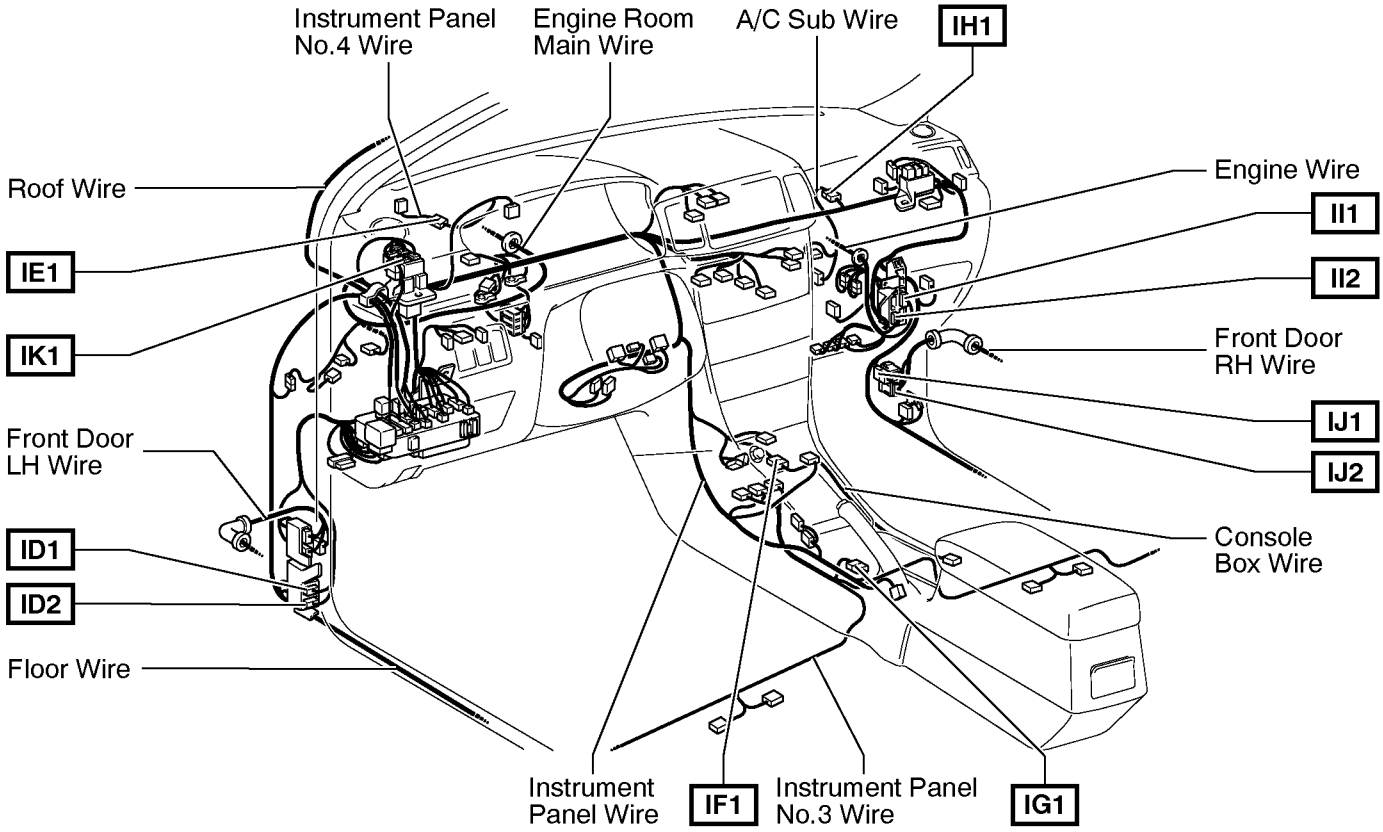

⬡ : Location of Splice Points

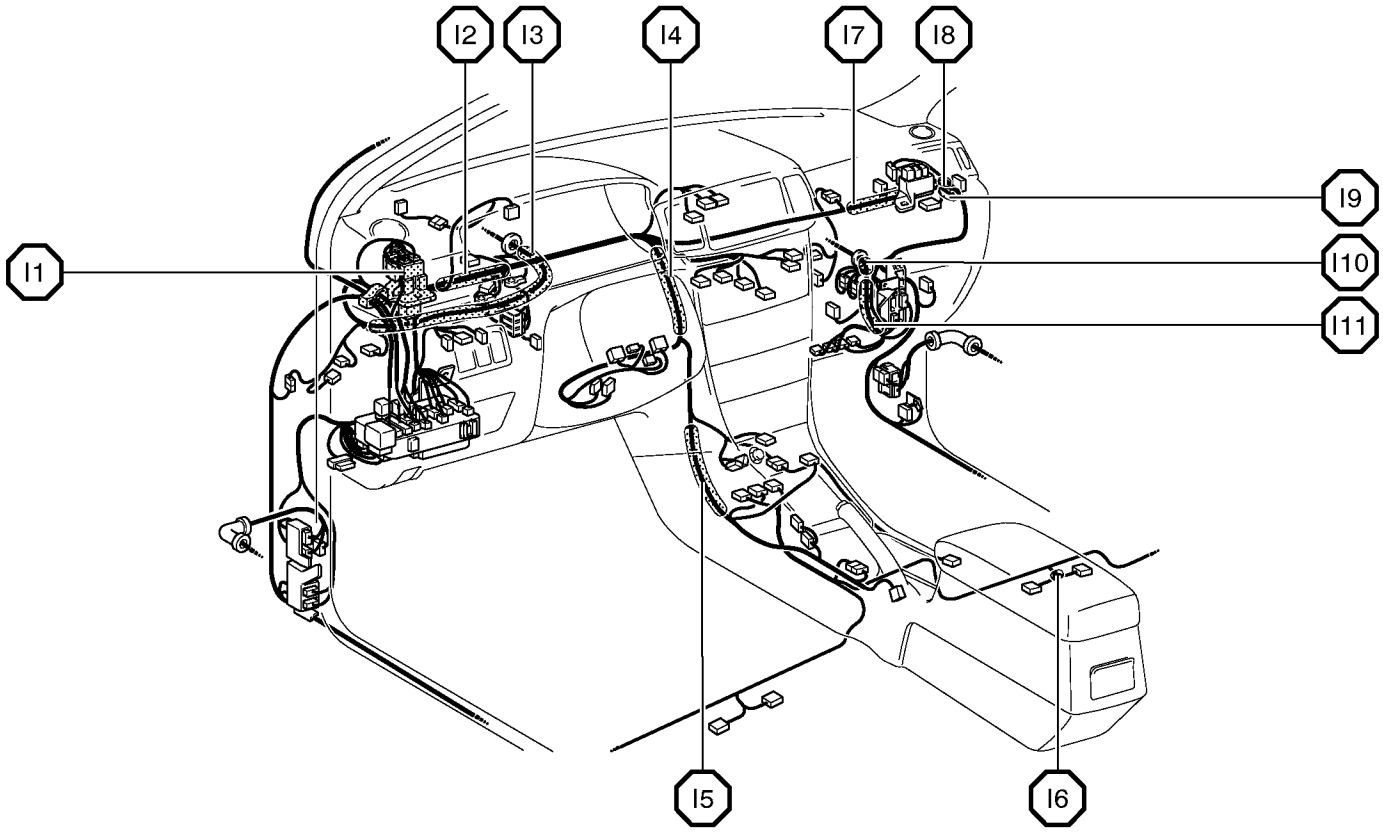

Connector Joining Wire Harness and Wire Harness

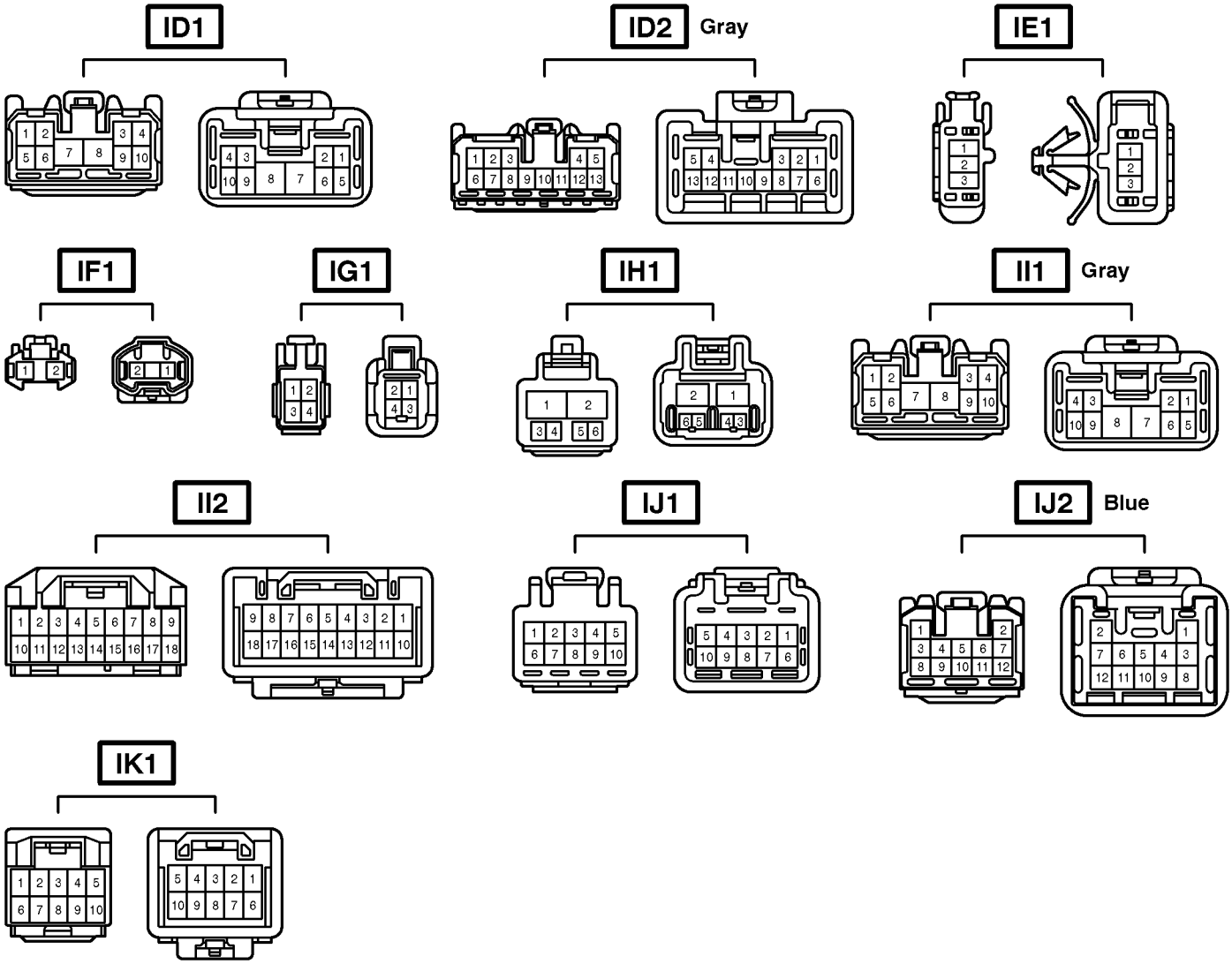

Code	Joining Wire Harness and Wire Harness (Connector Location)
ID1	Instrument Panel Wire and Floor Wire (Left Kick Panel)
ID2	
IE1	Instrument Panel Wire and Instrument Panel No.4 Wire (Behind the Combination Meter)
IF1	Console Box Wire and Instrument Panel Wire (Under the Instrument Panel Center)
IG1	Instrument Panel Wire and Instrument Panel No.3 Wire (Front Side of the Parking Brake Lever)
IH1	Instrument Panel Wire and A/C Sub Wire (Left Upper Side of the Blower Unit)
II1	Engine Wire and Instrument Panel Wire (Blower Unit RH)
II2	
IJ1	Front Door RH Wire and Instrument Panel Wire (Right Kick Panel)
IJ2	
IK1	Roof Wire and Instrument Panel Wire (Left Side of the Instrument Panel)

▭ : Location of Connector Joining Wire Harness and Wire Harness

▽ : Location of Ground Points

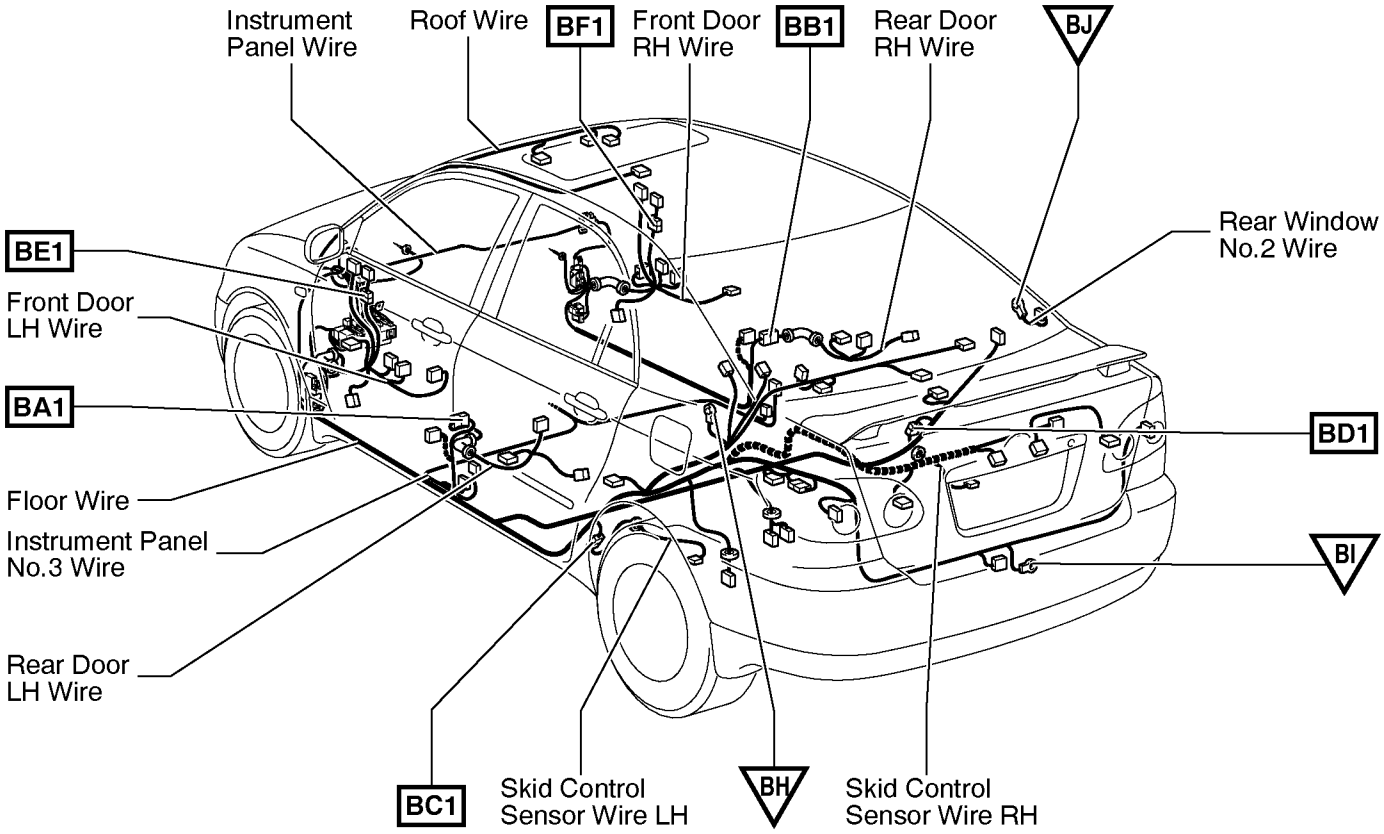

⬡ : Location of Splice Points

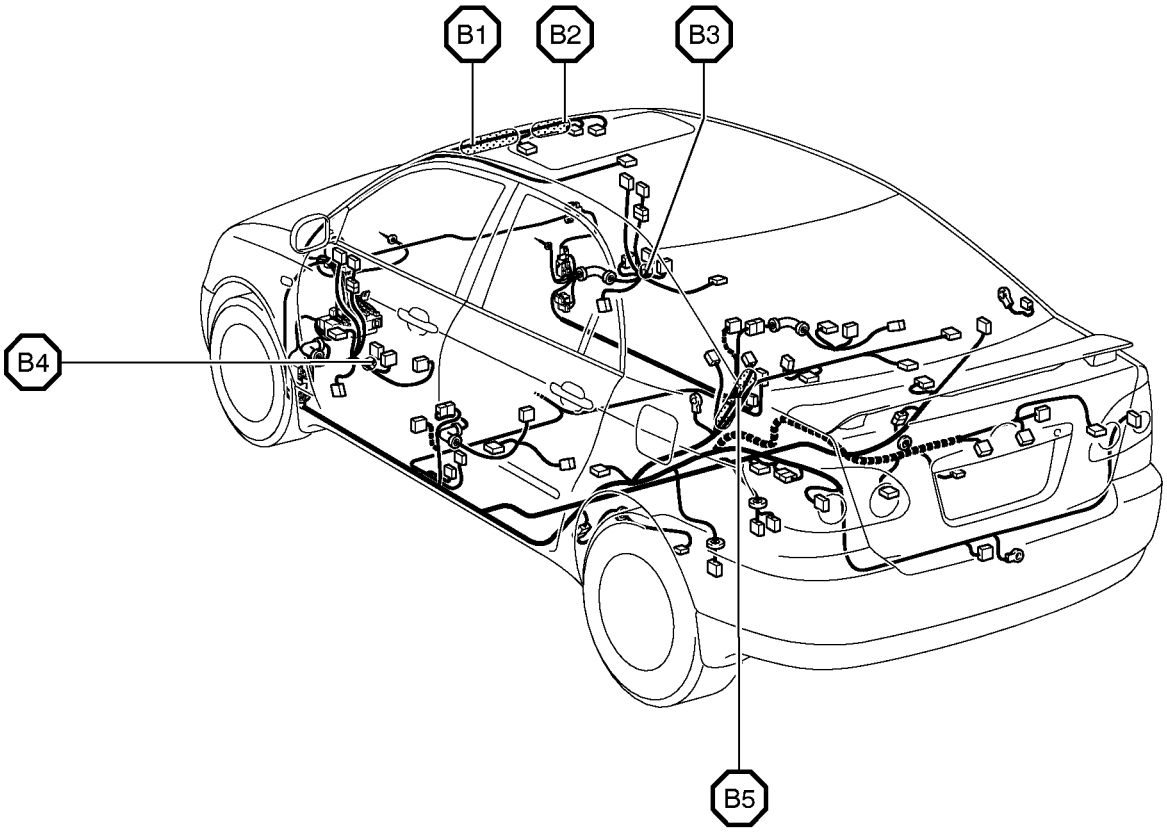

Connector Joining Wire Harness and Wire Harness

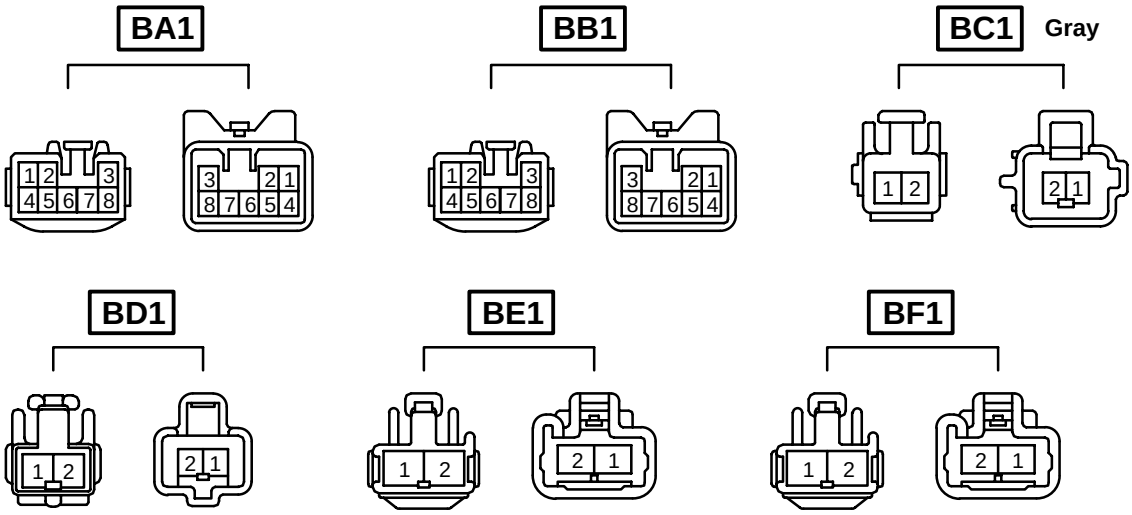

Code	Joining Wire Harness and Wire Harness (Connector Location)
BA1	Rear Door LH Wire and Floor Wire (Left Center Pillar)
BB1	Rear Door RH Wire and Instrument Panel Wire (Right Center Pillar)
BC1	Skid Control Sensor Wire LH and Floor Wire (Quarter Wheel House LH)
BD1	Skid Control Sensor Wire RH and Floor Wire (Quarter Wheel House RH)
BE1	Speaker Tweeter LH Wire and Front Door LH Wire (Inside of the Front Door LH)
BF1	Speaker Tweeter RH Wire and Front Door RH Wire (Inside of the Front Door RH)

Memo

Seat Belt Warning

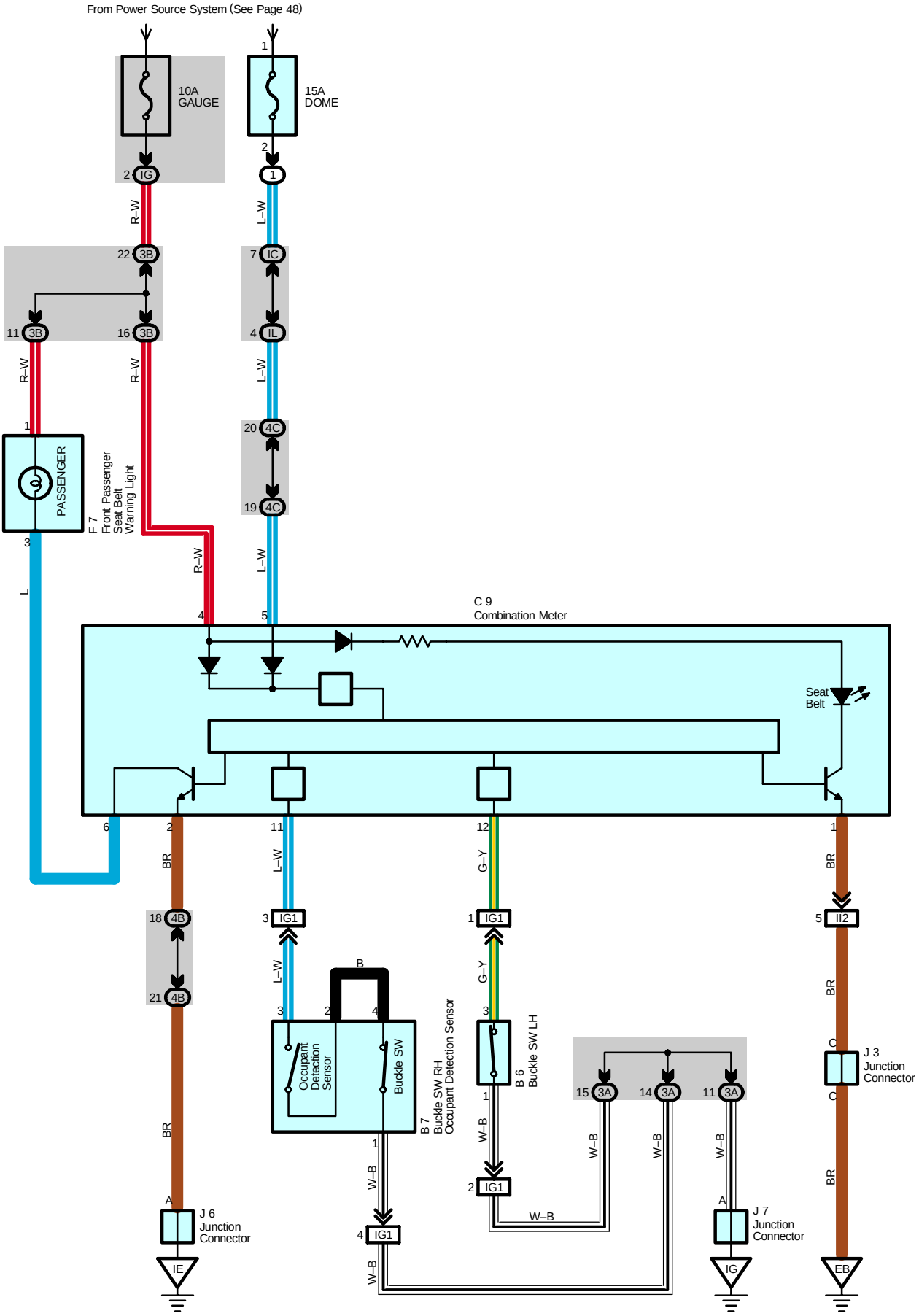

System Outline

Current is always applied from the DOME fuse to TERMINAL 5 of the combination meter. When the ignition SW is turned to ON position, the current from the GAUGE fuse flows to TERMINAL 4 of the combination meter and flows TERMINAL 1 of the front passenger seat belt warning light.

Seat Belt Warning System

When the ignition SW turned on, a signal is input to the combination meter. To determine whether the driver has fastened the seat belt, a signal is input from the buckle SW LH to TERMINAL 12 of the combination meter. When the seat belt is not fastened, the seat belt warning light in the combination meter blinks, and emits a warning sound.
In addition, the front passenger is recognized by a sensor (Occupant detection sensor) is installed in the front passenger seat, and determines whether the seat belt is fastened. When not fastened, the signals from the occupant detection sensor is input to TERMINAL 11 of the combination meter, and the front passenger seat belt warning light blinks.

Service Hints

B6 Buckle SW LH

3–1 : Open with the driver's seat belt in use

C9 Combination Meter

5–Ground : Always approx. 12 volts
4–Ground : Approx. 12 volts with the ignition SW at ON position
1–Ground : Always continuity

: Parts Location

Code	See Page	Code	See Page	Code	See Page
B6	34	F7	35	J7	35
B7	34	J3	35		
C9	34	J6	35		

: Relay Blocks

Code	See Page	Relay Blocks (Relay Block Location)
1	22	Engine Room R/B (Engine Compartment Left)

: Junction Block and Wire Harness Connector

Code	See Page	Junction Block and Wire Harness (Connector Location)
IC	25	Engine Room Main Wire and Instrument Panel J/B (Lower Finish Panel)
IG	25	Instrument Panel Wire and Instrument Panel J/B (Lower Finish Panel)
IL	24	
3A	28	Instrument Panel Wire and RH J/B (Right Side of the Instrument Panel Reinforcement)
3B		
4B	30	Instrument Panel Wire and Center J/B (Behind the Combination Meter)
4C		

: Connector Joining Wire Harness and Wire Harness

Code	See Page	Joining Wire Harness and Wire Harness (Connector Location)
IG1	42	Instrument Panel Wire and Instrument Panel No.3 Wire (Front Side of the Parking Brake Lever)
II2	42	Engine Wire and Instrument Panel Wire (Blower Unit RH)

: Ground Points

Code	See Page	Ground Points Location
EB	38	Left Side of the Cylinder Head
IE	40	Behind the Combination Meter
IG	40	Right Kick Panel

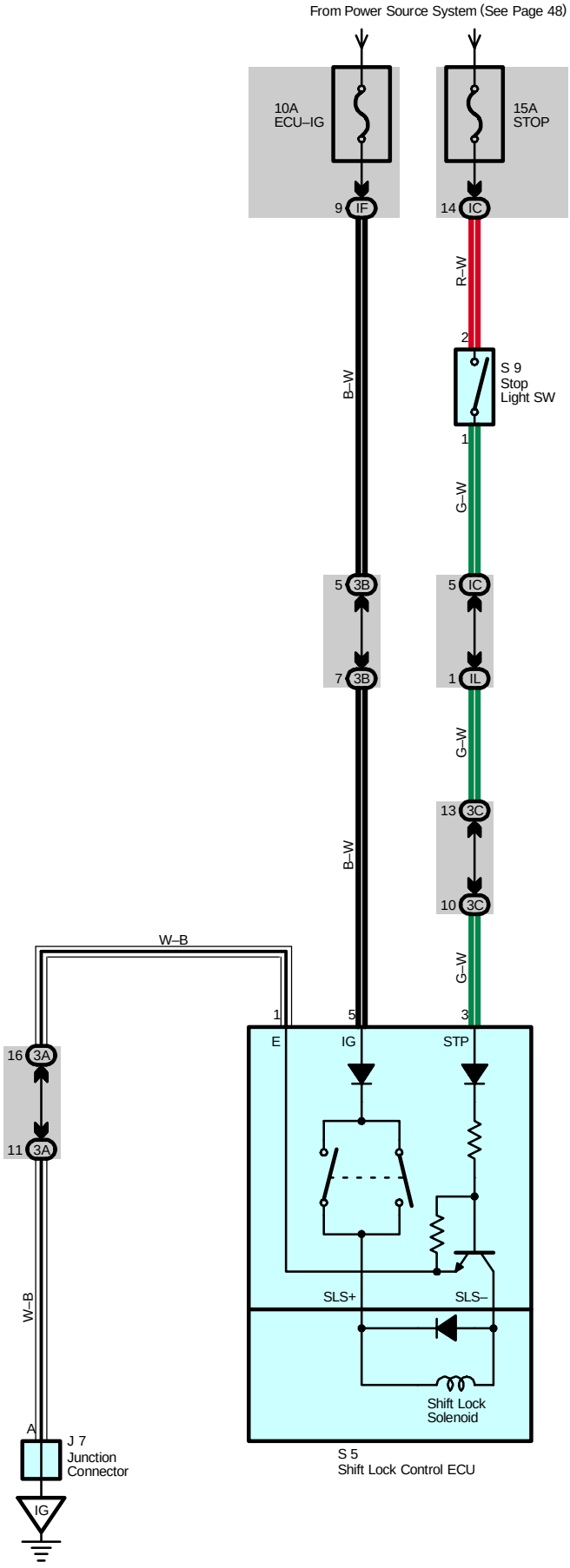
From Power Source System (See Page 48)
10A
ECU–IG
15A
STOP
9 IF
14 IC
R–W
2
S 9
Stop
Light SW
1
B–W
G–W
5 3B
7 3B
5 IC
1 IL
G–W
13 3C
10 3C
B–W
G–W
W–B
1
5
3
E
IG
STP
16 3A
11 3A
SLS+
SLS–
Shift Lock
Solenoid
W–B
A
J 7
Junction
Connector
IG
S 5
Shift Lock Control ECU

System Outline

When the ignition SW is turned to ON position, the current from the ECU–IG fuse flows to TERMINAL 5 of the shift lock control ECU.

Shift Lock Mechanism

With the ignition SW at ON position, when a signal that the brake pedal is depressed (Stop light SW on) and a signal that the shift lever is put in P position is input to the ECU, the ECU operates and the current flows from TERMINAL 5 of the ECU to TERMINAL SLS+ of the shift lock solenoid to TERMINAL SLS– to TERMINAL 1 of the ECU to GROUND. This causes the shift lock solenoid to turn on (Plate stopper disengages) and the shift lever can shift into position other than P.

Service Hints

S5 Shift Lock Control ECU

5–Ground : Approx. 12 volts with the ignition SW at ON position
1–Ground : Always continuity
3–Ground : Approx. 12 volts with the brake pedal depressed

S9 Stop Light SW

2–1 : Closed with the brake pedal depressed

○ : Parts Location

Code	See Page	Code	See Page	Code	See Page
J7	35	S5	35	S9	35

⬭ : Junction Block and Wire Harness Connector

Code	See Page	Junction Block and Wire Harness (Connector Location)
IC	25	Engine Room Main Wire and Instrument Panel J/B (Lower Finish Panel)
IF	25	Instrument Panel Wire and Instrument Panel J/B (Lower Finish Panel)
IL	24	
3A	28	Instrument Panel Wire and RH J/B (Right Side of the Instrument Panel Reinforcement)
3B		
3C		

▽ : Ground Points

Code	See Page	Ground Points Location
IG	40	Right Kick Panel

NOTICE: When inspecting or repairing the SRS, perform the operation in accordance with the following precautionary instructions and the procedure and precautions in the Repair Manual for the applicable model year.

- Malfunction symptoms of the SRS are difficult to confirm, so the DTCs become the most important source of information when troubleshooting. When troubleshooting the SRS, always inspect the DTCs before disconnecting the battery.
- **Work must be started after 90 seconds from when the ignition switch is turned to the "LOCK" position and the negative (–) terminal cable is disconnected from the battery.**
  (The SRS is equipped with a back–up power source so that if work is started within 90 seconds from disconnecting the negative (–) terminal cable of the battery, the SRS may be deployed.)
- When the negative (–) terminal cable is disconnected from the battery, the memory of the clock and audio system will be canceled. So before starting work, make a record of the contents memorized in the audio memory system. When work is finished, reset the audio systems as they were before and adjust the clock. This vehicle has power tilt and power telescopic steering, power seat and power outside rear view mirror which are all equipped with memory function. However, it is not possible to make a record of the memory contents. So when the work is finished, it will be necessary to explain this fact tot the customer, and ask the customer to adjust the features and reset the memory. To avoid erasing the memory in each memory system, never use a back–up power supply from outside the vehicle.
- Before repairs, remove the airbag sensor if shocks are likely to be applied to the sensor during repairs.
- Do not expose the steering wheel pad, front passenger airbag assembly, side airbag assembly, seat belt pretensioner, airbag sensor assembly, front airbag sensor assembly or side airbag sensor assembly directly to hot air or flames.
- Even in cases of a minor collision where the SRS does not deploy, the steering wheel pad, front passenger airbag assembly, side airbag assembly, seat belt pretensioner, airbag sensor assembly, front airbag sensor assembly and side airbag sensor assembly should be inspected.
- Never use SRS parts from another vehicle. When replacing parts, replace them with new parts.
- Never disassemble and repair the steering wheel pad, front passenger airbag assembly, side airbag assembly, seat belt pretensioner, airbag sensor assembly, front airbag sensor assembly or side airbag sensor assembly in order to reuse it.
- If the steering wheel pad, front passenger airbag assembly, side airbag assembly, seat belt pretensioner, airbag sensor assembly, front airbag sensor assembly or side airbag sensor assembly has been dropped, or if there are cracks, dents or other defects in the case, bracket or connector, replace them with new ones.
- Use a volt/ohmmeter with high impedance (10 kΩ/V minimum) for troubleshooting the system's electrical circuits.
- Information labels are attached to the periphery of the SRS components. Follow the instructions on the notices.
- After work on the SRS is completed, perform the SRS warning light check.
- If the vehicle is equipped with a mobile communication system, refer to the precaution in the IN section of the Repair Manual.

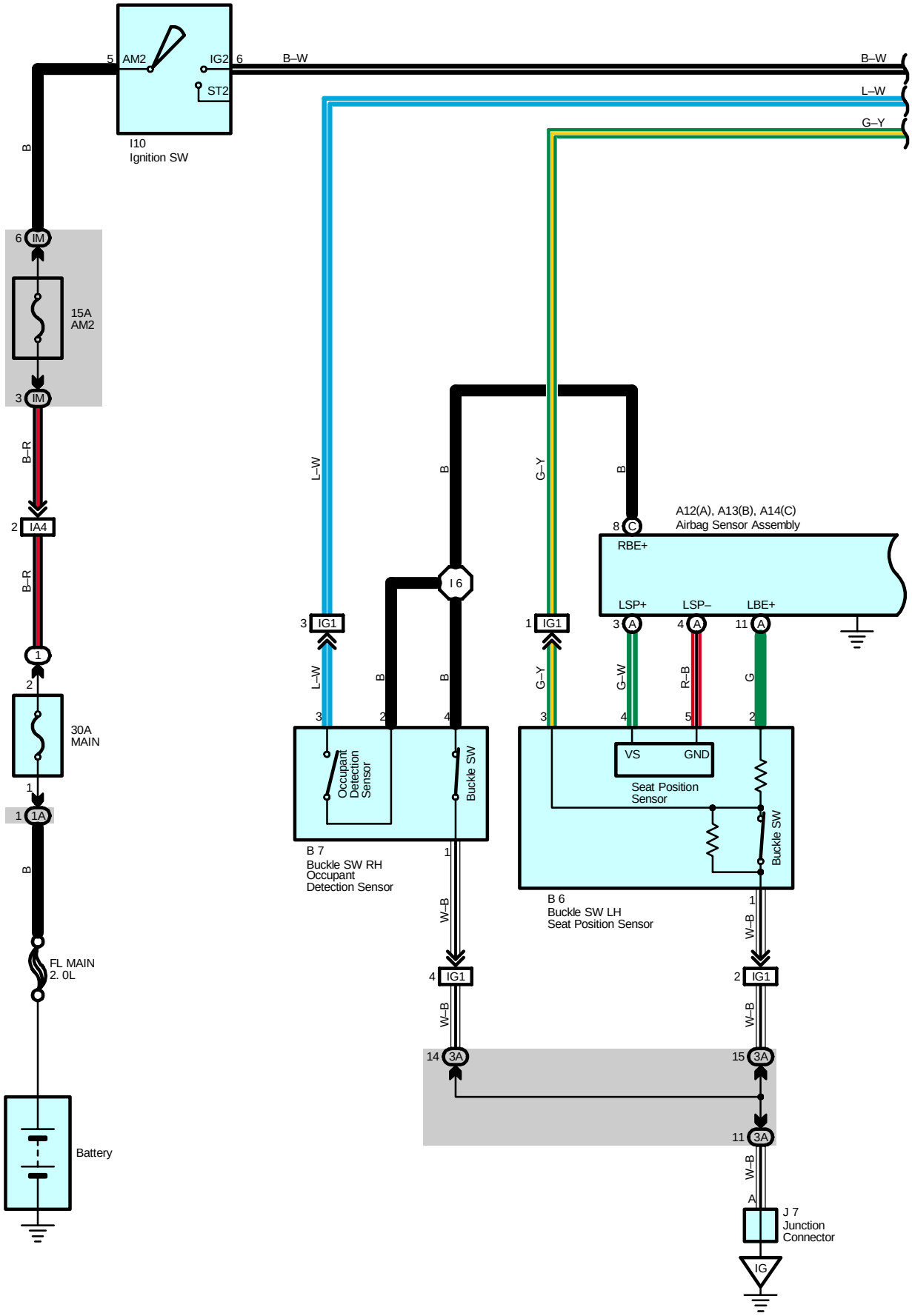
5 AM2
IG2 6
ST2
I10
Ignition SW
B–W
B–W
L–W
G–Y
B
6 IM
15A
AM2
3 IM
B–R
2 IA4
B–R
1
2
30A
MAIN
1
1 1A
B
FL MAIN
2. 0L
Battery
L–W
B
G–Y
B
8 C
A12(A), A13(B), A14(C)
Airbag Sensor Assembly
RBE+
LSP+
LSP–
LBE+
I 6
3 IG1
1 IG1
3 A
4 A
11 A
L–W
B
B
G–Y
G–W
R–B
G
3
2
4
3
4
5
2
Occupant
Detection
Sensor
Buckle SW
VS
GND
Seat Position
Sensor
Buckle SW
B 7
Buckle SW RH
Occupant
Detection Sensor
B 6
Buckle SW LH
Seat Position Sensor
1
W–B
1
W–B
4 IG1
2 IG1
W–B
W–B
14 3A
15 3A
11 3A
W–B
A
J 7
Junction
Connector
IG

* 1 : w/ Side Airbag

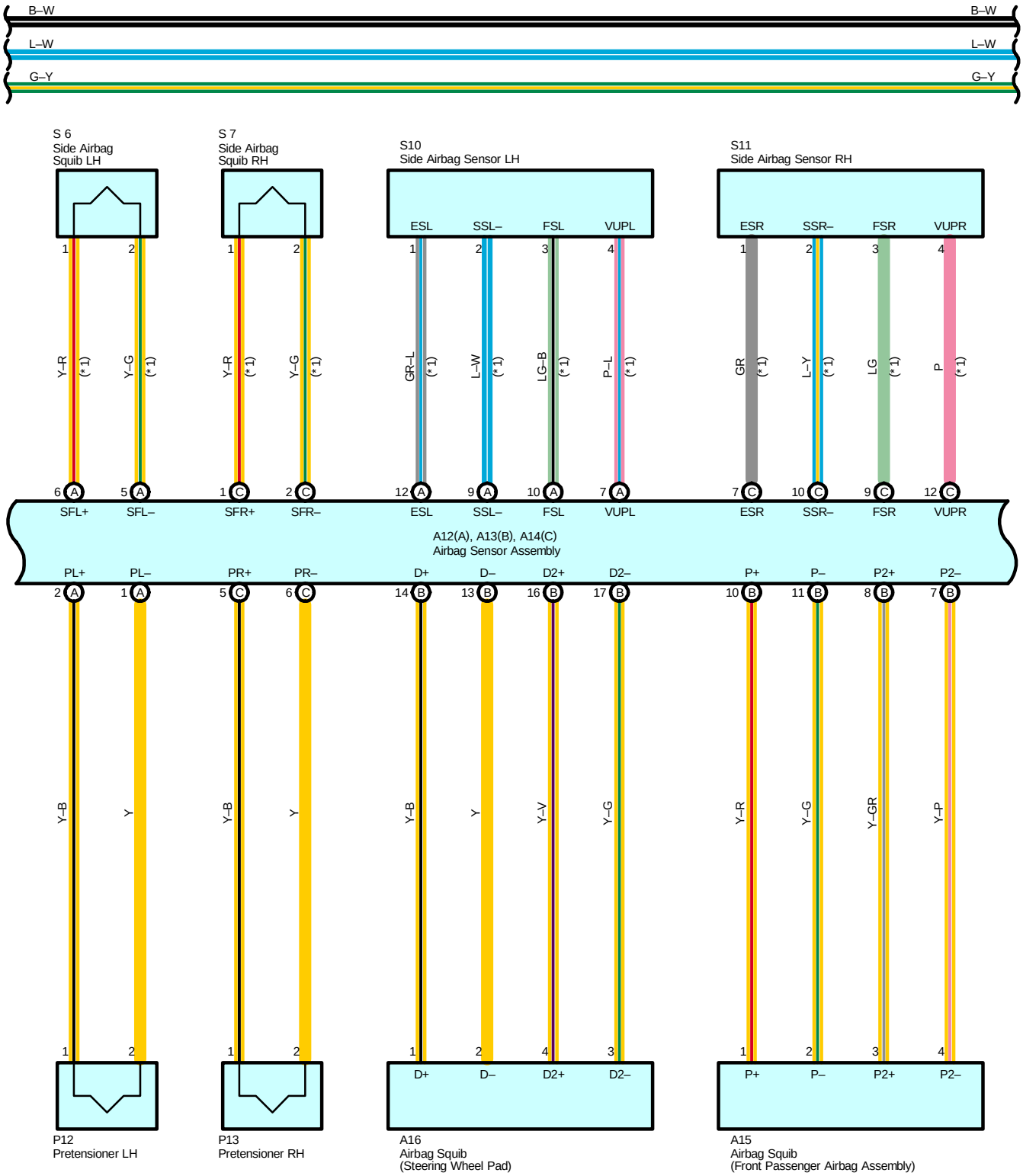

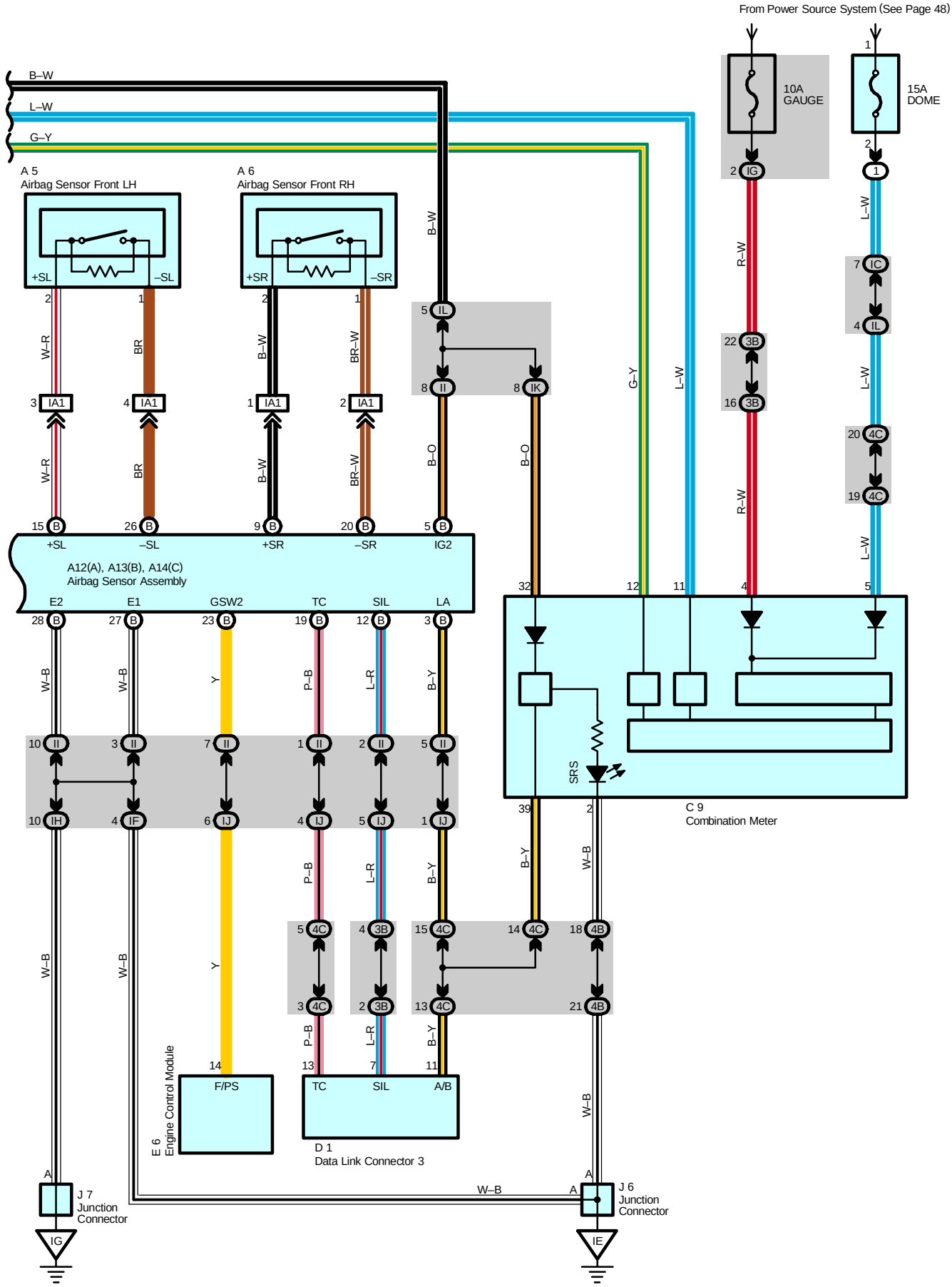
From Power Source System (See Page 48)
B–W
L–W
G–Y
10A GAUGE
15A DOME
A 5
Airbag Sensor Front LH
A 6
Airbag Sensor Front RH
+SL
–SL
+SR
–SR
W–R
BR
B–W
BR–W
B–O
R–W
L–W
G–Y
A12(A), A13(B), A14(C)
Airbag Sensor Assembly
E2
E1
GSW2
TC
SIL
LA
IG2
SRS
C 9
Combination Meter
P–B
L–R
B–Y
W–B
Y
E 6
Engine Control Module
F/PS
D 1
Data Link Connector 3
A/B
J 7
Junction Connector
J 6
Junction Connector
IG
IE

System Outline

The SRS is a driver and front passenger protection device which has a supplemental role to the seat belts.
When the ignition SW is turned to ON, current from the MAIN fuse flows to AM2 fuse to ignition SW (IG2) to TERMINAL (B) 5 of the airbag sensor assembly.
If an accident occurs while driving, when the frontal impact exceeds a set level, the current from the TERMINAL (B) 5 of the airbag sensor assembly flows to TERMINALS (B) 14, (B) 16, (B) 10, (B) 8, (A) 2 and (C) 5 of the airbag sensor assembly to the airbag squibs and the pretensioners to TERMINALS (B) 13, (B) 17, (B) 11, (B) 7, (A) 1 and (C) 6 of the airbag sensor assembly to TERMINAL (B) 20, (B) 27 or BODY GROUND to GROUND, so that the current flows to the front airbag squibs and the pretensioners, and causes them to operate.
When the side impact also exceeds a set level, the current from the TERMINAL (B) 5 of the airbag sensor assembly flows to TERMINALS (A) 6 and (C) 1 of the airbag sensor assembly to the side airbag squibs to TERMINALS (A) 5 and (C) 2 of the airbag sensor assembly to TERMINAL (B) 20, (B) 27 or BODY GROUND to GROUND, causing side airbag squibs to operate.
The airbag stored inside the steering wheel pad is instantaneously expanded to soften the shock to the driver.
The airbag stored inside the passenger's instrument panel is instantaneously expanded to soften the shock to the front passenger.
Side airbags are instantaneously expanded to soften the shock of side to the driver and front passenger.
The pretensioners make sure of the seat belt restrainability.

○ : Parts Location

Code	See Page	Code	See Page	Code	See Page
A5	32	B6	34	J7	35
A6	32	B7	34	P12	37
A12 A	34	C9	34	P13	37
A13 B	34	D1	34	S6	35
A14 C	34	E6	34	S7	35
A15	34	I10	35	S10	37
A16	34	J6	35	S11	37

⬭ : Relay Blocks

Code	See Page	Relay Blocks (Relay Block Location)
1	22	Engine Room R/B (Engine Compartment Left)

⬭ : Junction Block and Wire Harness Connector

Code	See Page	Junction Block and Wire Harness (Connector Location)
IC	25	Engine Room Main Wire and Instrument Panel J/B (Lower Finish Panel)
IF	25	Instrument Panel Wire and Instrument Panel J/B (Lower Finish Panel)
IG		
IH		
II		
IJ		
IK	24	
IL		
IM		
1A	22	Engine Wire and Engine Room J/B (Engine Compartment Left)
3A	28	Instrument Panel Wire and RH J/B (Right Side of the Instrument Panel Reinforcement)
3B		
4B	30	Instrument Panel Wire and Center J/B (Behind the Combination Meter)
4C		

▭ : Connector Joining Wire Harness and Wire Harness

Code	See Page	Joining Wire Harness and Wire Harness (Connector Location)
IA1	40	Engine Room Main Wire and Instrument Panel Wire (Left Side of the Instrument Panel Reinforcement)
IA4		
IG1	42	Instrument Panel Wire and Instrument Panel No.3 Wire (Front Side of the Parking Brake Lever)

 **: Ground Points**

Code	See Page	Ground Points Location
IE	40	Behind the Combination Meter
IG	40	Right Kick Panel

 **: Splice Points**

Code	See Page	Wire Harness with Splice Points	Code	See Page	Wire Harness with Splice Points
I6	42	Instrument Panel No.3 Wire			

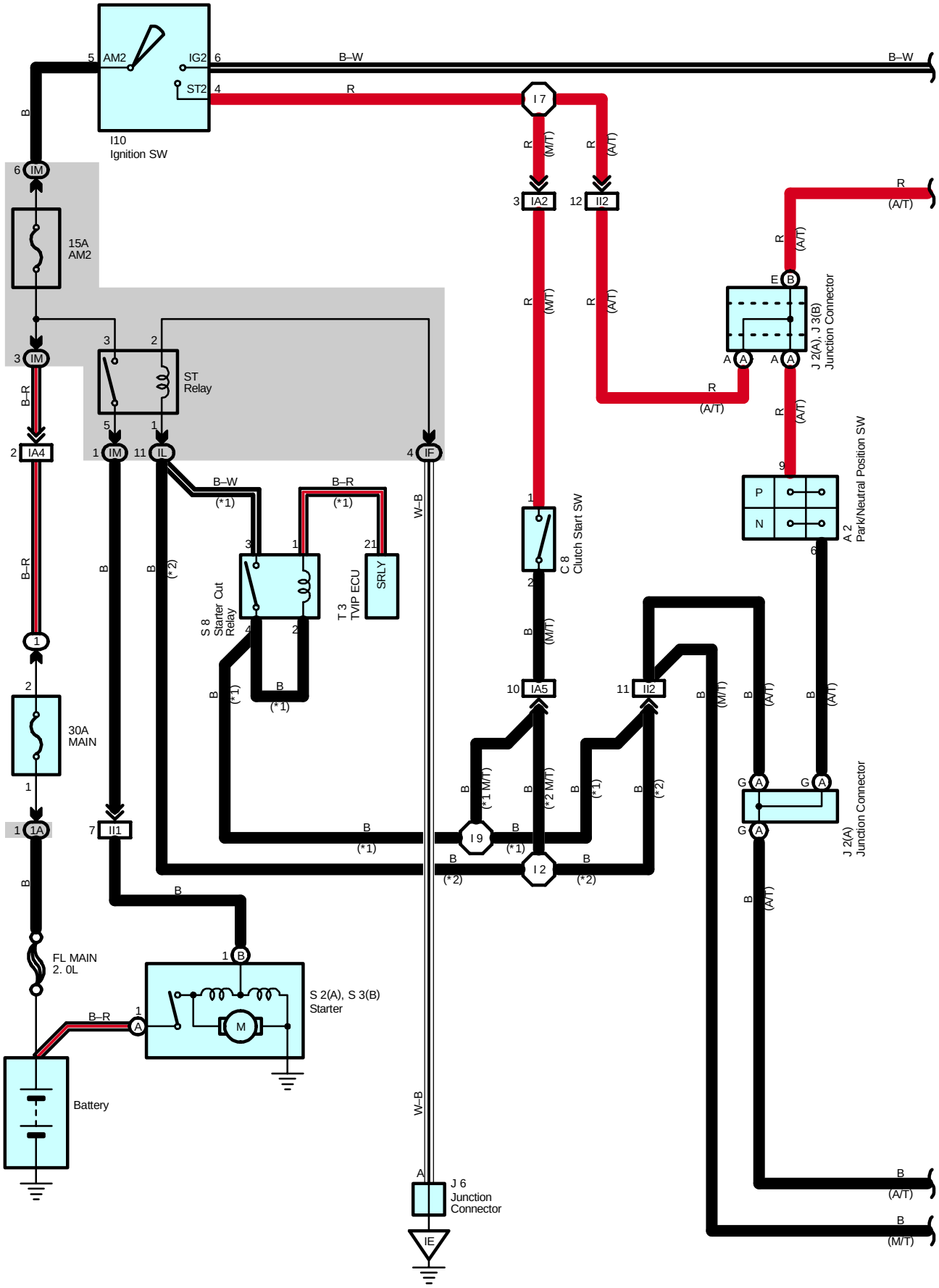
I10
Ignition SW
AM2
IG2
ST2
B–W
R
15A
AM2
ST
Relay
30A
MAIN
FL MAIN
2. 0L
Battery
S 2(A), S 3(B)
Starter
S 8
Starter Cut
Relay
T 3
TVIP ECU
SRLY
C 8
Clutch Start SW
A 2
Park/Neutral Position SW
J 2(A), J 3(B)
Junction Connector
J 2(A)
Junction Connector
J 6
Junction
Connector
(A/T)
(M/T)
(*1)
(*2)

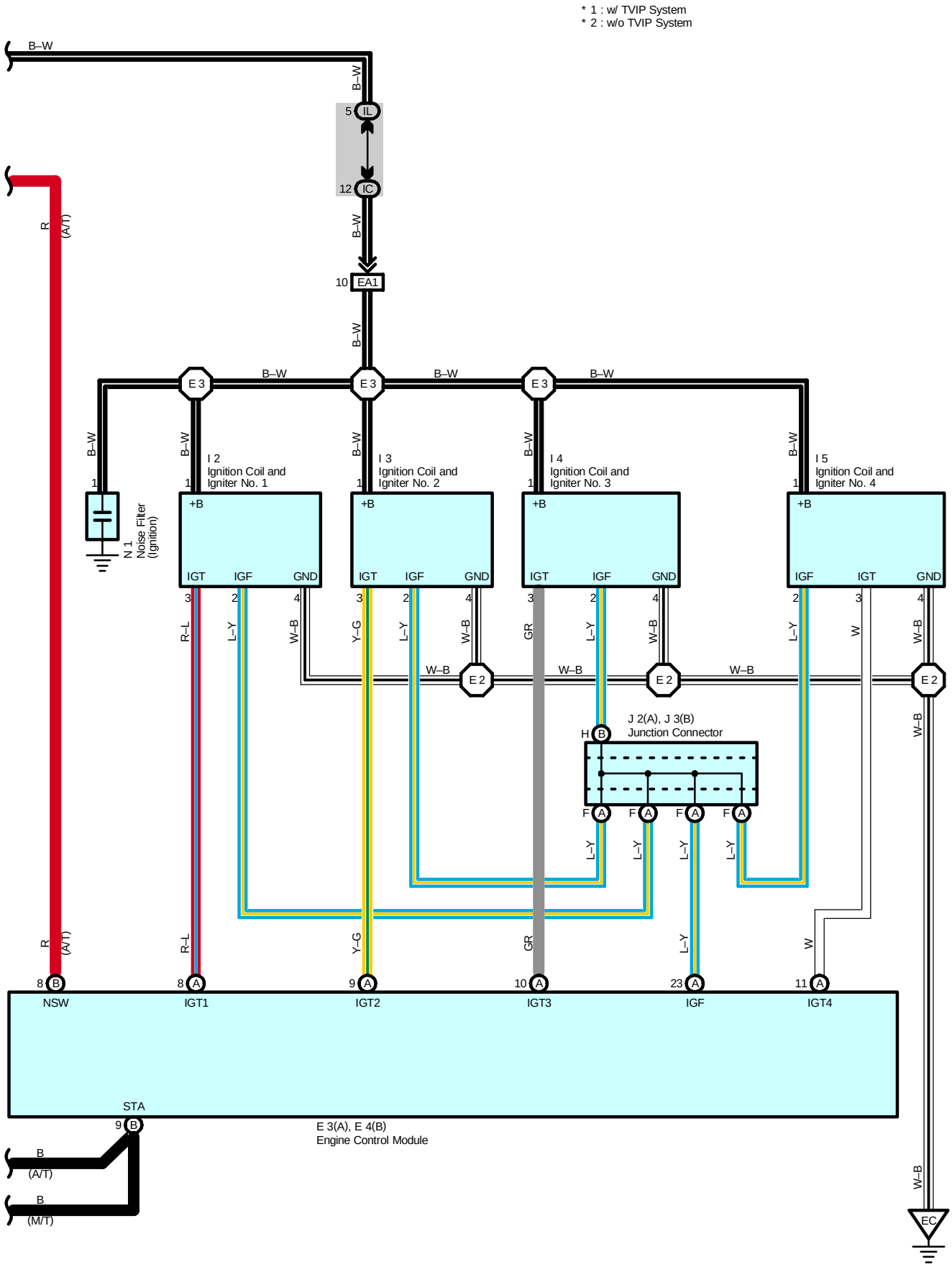
* 1 : w/ TVIP System
* 2 : w/o TVIP System
B–W
5 IL
12 IC
10 EA1
R (A/T)
E 3
I 2 Ignition Coil and Igniter No. 1
I 3 Ignition Coil and Igniter No. 2
I 4 Ignition Coil and Igniter No. 3
I 5 Ignition Coil and Igniter No. 4
N 1 Noise Filter (Ignition)
+B
IGT
IGF
GND
R–L
L–Y
W–B
Y–G
GR
W
E 2
J 2(A), J 3(B) Junction Connector
NSW
IGT1
IGT2
IGT3
IGF
IGT4
STA
E 3(A), E 4(B) Engine Control Module
B (A/T)
B (M/T)
EC

Service Hints

I10 Ignition SW

5–4 : Closed with the ignition SW at ST position
5–6 : Closed with the ignition SW at ON or ST position

S2 (A), S3 (B) Starter

Points closed with the shift lever at P or N position and the ignition SW at ST position (A/T)
Points closed with the clutch pedal depressed and the ignition SW at ST position (M/T)

: Parts Location

Code	See Page	Code	See Page	Code	See Page
A2	32	I4	33	N1	33
C8	34	I5	33	S2 A	33
E3 A	34	I10	35	S3 B	33
E4 B	34	J2 A	35	S8	35
I2	33	J3 B	35	T3	35
I3	33	J6	35		

: Relay Blocks

Code	See Page	Relay Blocks (Relay Block Location)
1	22	Engine Room R/B (Engine Compartment Left)

: Junction Block and Wire Harness Connector

Code	See Page	Junction Block and Wire Harness (Connector Location)
IC	25	Engine Room Main Wire and Instrument Panel J/B (Lower Finish Panel)
IF	25	Instrument Panel Wire and Instrument Panel J/B (Lower Finish Panel)
IL	24	
IM		
1A	22	Engine Wire and Engine Room J/B (Engine Compartment Left)

: Connector Joining Wire Harness and Wire Harness

Code	See Page	Joining Wire Harness and Wire Harness (Connector Location)
EA1	38	Engine Wire and Engine Room Main Wire (Inside of the Engine Room R/B)
IA2	40	Engine Room Main Wire and Instrument Panel Wire (Left Side of the Instrument Panel Reinforcement)
IA4		
IA5		
II1	42	Engine Wire and Instrument Panel Wire (Blower Unit RH)
II2		

: Ground Points

Code	See Page	Ground Points Location
EC	38	Left Side of the Cylinder Head
IE	40	Behind the Combination Meter

: Splice Points

Code	See Page	Wire Harness with Splice Points	Code	See Page	Wire Harness with Splice Points
E2	38	Engine Wire	I7	42	Instrument Panel Wire
E3			I9		
I2	42	Instrument Panel Wire			

Stop Light

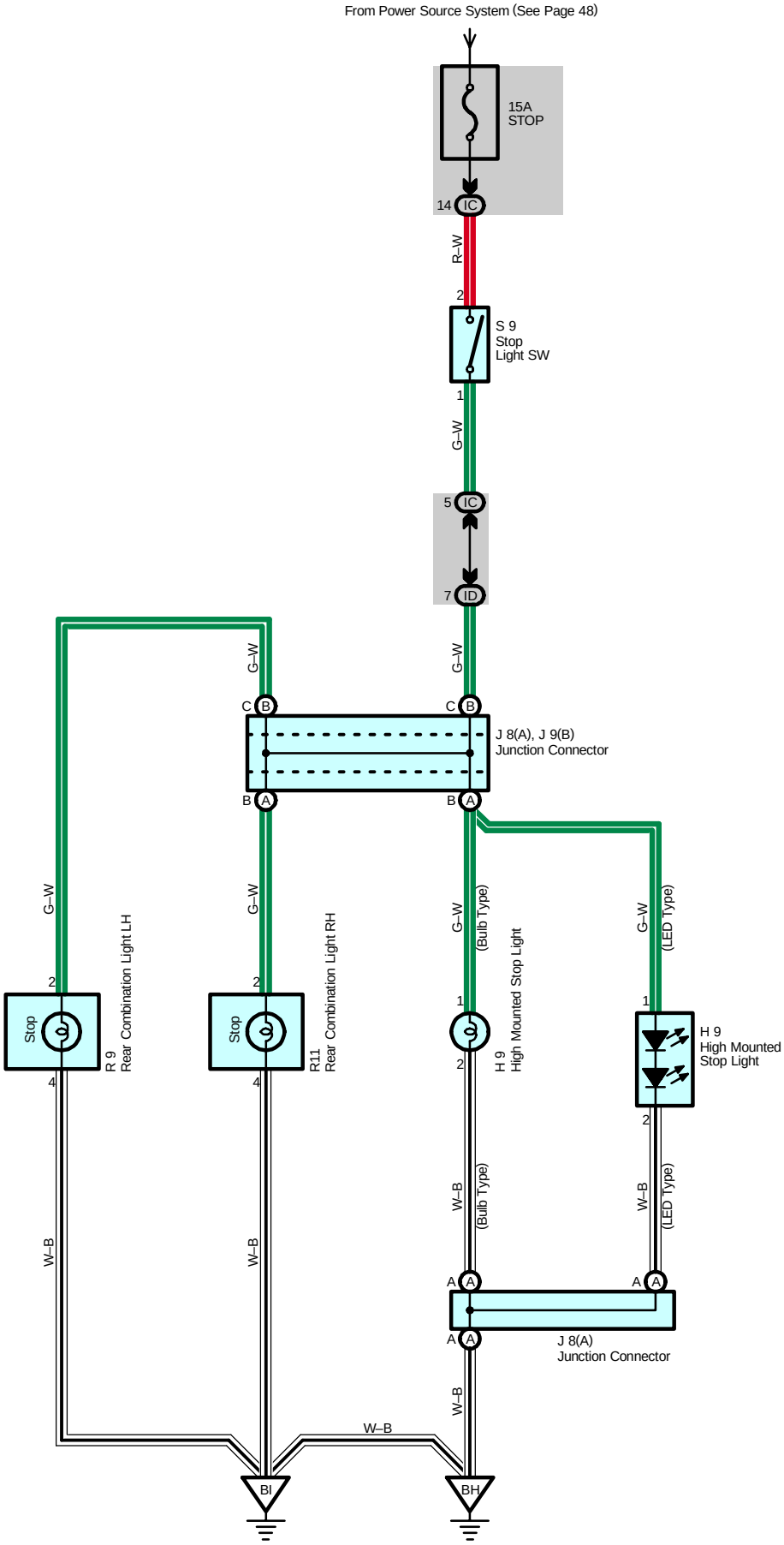
From Power Source System (See Page 48)
15A
STOP
14 IC
R–W
2
S 9
Stop
Light SW
1
G–W
5 IC
7 ID
G–W
G–W
C B
C B
J 8(A), J 9(B)
Junction Connector
B A
B A
G–W
G–W
G–W
(Bulb Type)
G–W
(LED Type)
2
2
1
1
Stop
Stop
R 9
Rear Combination Light LH
R11
Rear Combination Light RH
H 9
High Mounted Stop Light
H 9
High Mounted
Stop Light
4
4
2
2
W–B
W–B
W–B
(Bulb Type)
W–B
(LED Type)
A A
A A
J 8(A)
Junction Connector
W–B
W–B
BI
BH

Service Hints

S9 Stop Light SW

2–1 : Closed with the brake pedal depressed

: Parts Location

Code	See Page	Code	See Page	Code	See Page
H9	36	J9 B	36	R11	37
J8 A	36	R9	37	S9	35

: Junction Block and Wire Harness Connector

Code	See Page	Junction Block and Wire Harness (Connector Location)
IC	25	Engine Room Main Wire and Instrument Panel J/B (Lower Finish Panel)
ID	25	Floor Wire and Instrument Panel J/B (Lower Finish Panel)

: Ground Points

Code	See Page	Ground Points Location
BH	44	Under the Left Quarter Pillar
BI	44	Lower Back Panel

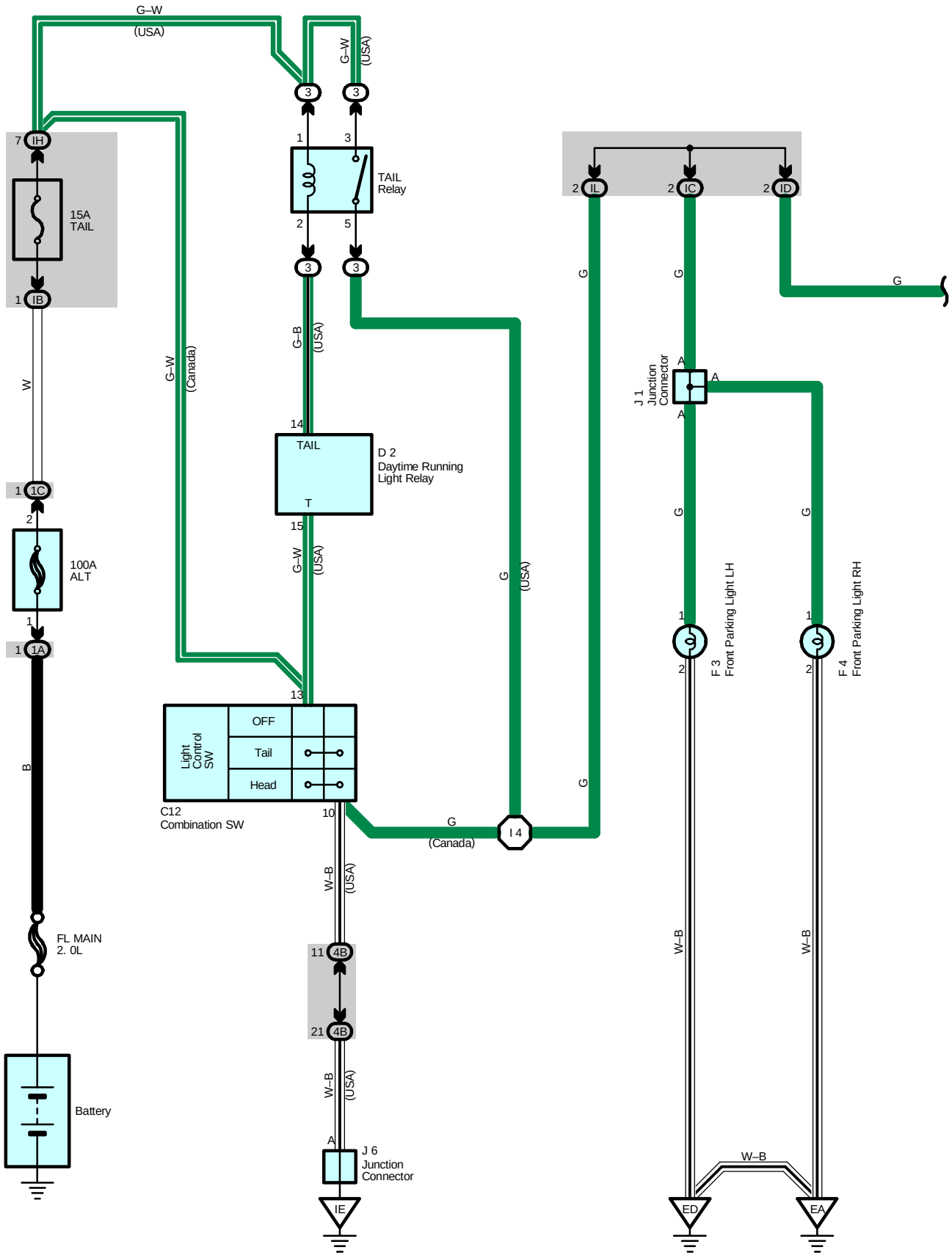
G–W
(USA)
G–W
(USA)
7 IH
15A
TAIL
1 IB
W
G–W
(Canada)
1 1C
2
100A
ALT
1
1 1A
B
FL MAIN
2. 0L
Battery
1 3
TAIL
Relay
2 5
3
3
G–B
(USA)
14
TAIL
T
D 2
Daytime Running
Light Relay
15
G–W
(USA)
13
Light
Control
SW
OFF
Tail
Head
C12
Combination SW
10
W–B
(USA)
11 4B
21 4B
W–B
(USA)
A
J 6
Junction
Connector
IE
G
(USA)
G
(Canada)
I 4
G
2 IL
2 IC
2 ID
G
G
G
J 1
Junction
Connector
A
A
A
G
G
1
2
F 3
Front Parking Light LH
1
2
F 4
Front Parking Light RH
W–B
W–B
W–B
ED
EA

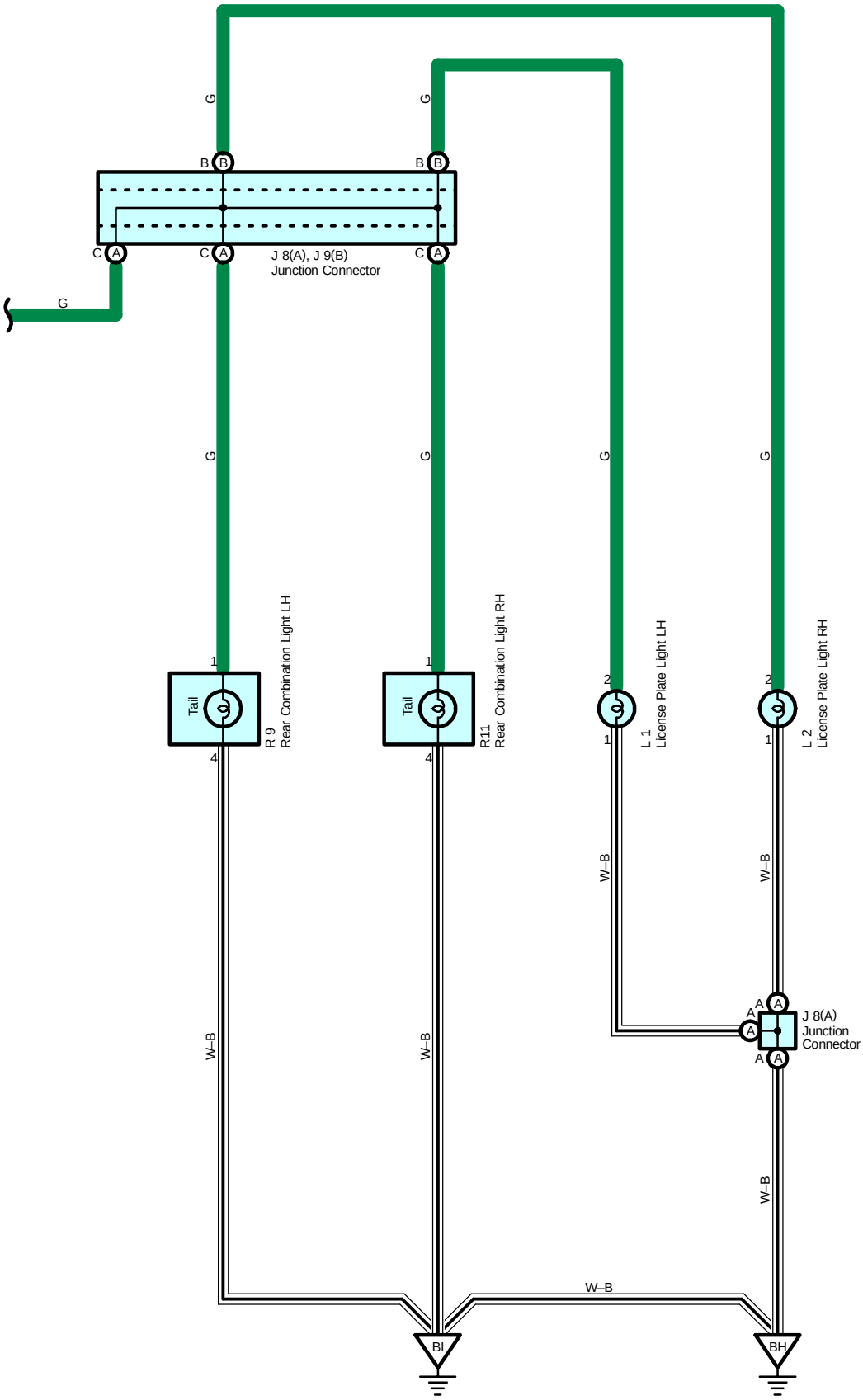
G
G
B
B
B
B
C
A
C
A
C
A
J 8(A), J 9(B)
Junction Connector
G
G
G
G
G
1
Tail
4
R 9
Rear Combination Light LH
1
Tail
4
R11
Rear Combination Light RH
2
1
L 1
License Plate Light LH
2
1
L 2
License Plate Light RH
W–B
W–B
W–B
W–B
W–B
A
A
A
A
A
A
J 8(A)
Junction
Connector
BI
BH

Taillight

Service Hints

C12 Combination SW

10–13 : Continuity with the light control SW at Tail or Head position

TAIL Relay

5–3 : Closed with the light control SW at Tail or Head position

: Parts Location

Code	See Page	Code		See Page	Code	See Page
C12	34	J1		33	L1	36
D2	34	J6		35	L2	36
F3	32	J8	A	36	R9	37
F4	32	J9	B	36	R11	37

: Relay Blocks

Code	See Page	Relay Blocks (Relay Block Location)
3	28	RH R/B (Right Side of the Instrument Panel Reinforcement)

: Junction Block and Wire Harness Connector

Code	See Page	Junction Block and Wire Harness (Connector Location)
IB	25	Engine Room Main Wire and Instrument Panel J/B (Lower Finish Panel)
IC		
ID	25	Floor Wire and Instrument Panel J/B (Lower Finish Panel)
IH	25	Instrument Panel Wire and Instrument Panel J/B (Lower Finish Panel)
IL	24	
1A	22	Engine Wire and Engine Room J/B (Engine Compartment Left)
1C	22	Engine Room Main Wire and Engine Room J/B (Engine Compartment Left)
4B	30	Instrument Panel Wire and Center J/B (Behind the Combination Meter)

: Ground Points

Code	See Page	Ground Points Location
EA	38	Front Right Fender
ED	38	Front Left Suspension Tower
IE	40	Behind the Combination Meter
BH	44	Under the Left Quarter Pillar
BI	44	Lower Back Panel

: Splice Points

Code	See Page	Wire Harness with Splice Points	Code	See Page	Wire Harness with Splice Points
I4	42	Instrument Panel Wire			

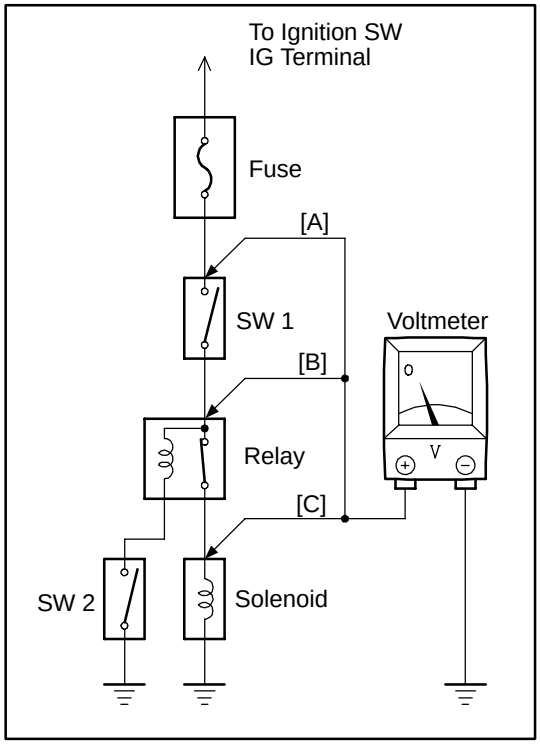

VOLTAGE CHECK

(a) Establish conditions in which voltage is present at the check point.

Example:
[A] – Ignition SW on
[B] – Ignition SW and SW 1 on
[C] – Ignition SW, SW 1 and Relay on (SW 2 off)

(b) Using a voltmeter, connect the negative lead to a good ground point or negative battery terminal, and the positive lead to the connector or component terminal.
This check can be done with a test light instead of a voltmeter.

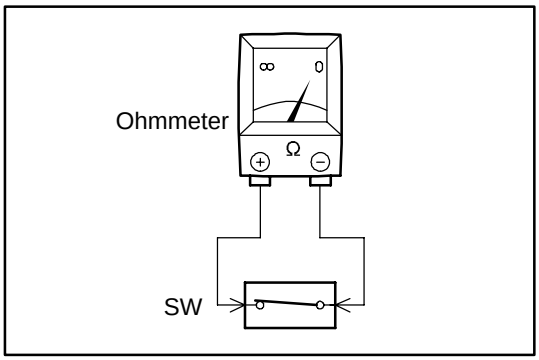

CONTINUITY AND RESISTANCE CHECK

(a) Disconnect the battery terminal or wire so there is no voltage between the check points.

(b) Contact the two leads of an ohmmeter to each of the check points.

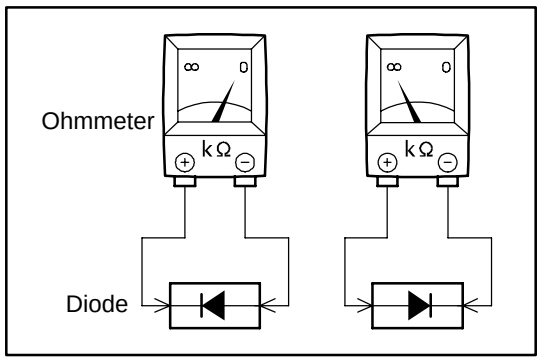

If the circuit has diodes, reverse the two leads and check again.
When contacting the negative lead to the diode positive side and the positive lead to the negative side, there should be continuity.
When contacting the two leads in reverse, there should be no continuity.

(c) Use a volt/ohmmeter with high impedance (10 kΩ/V minimum) for troubleshooting of the electrical circuit.

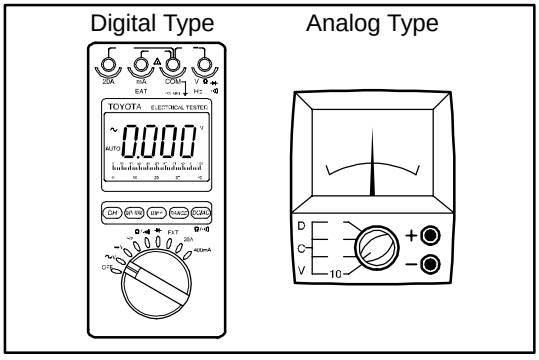

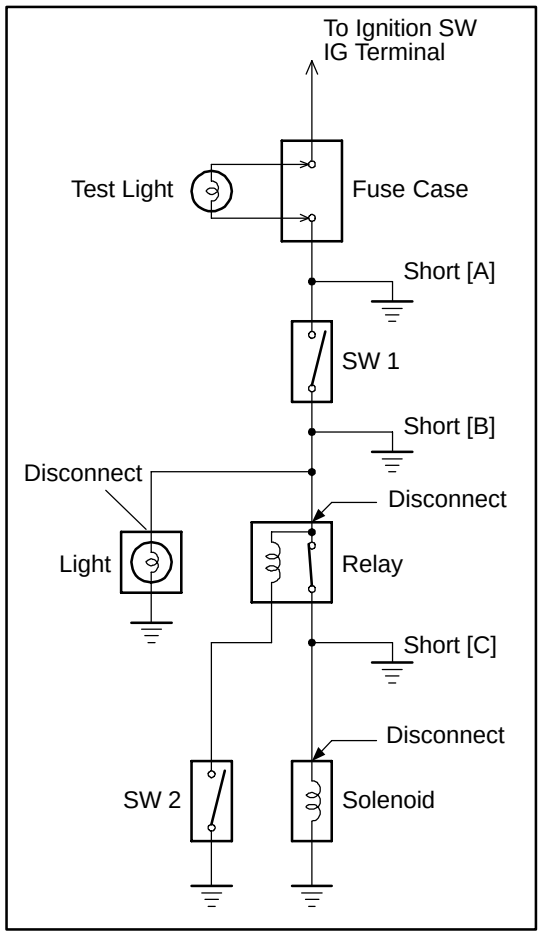

FINDING A SHORT CIRCUIT

(a) Remove the blown fuse and disconnect all loads of the fuse.

(b) Connect a test light in place of the fuse.

(c) Establish conditions in which the test light comes on.

Example:
[A] – Ignition SW on
[B] – Ignition SW and SW 1 on
[C] – Ignition SW, SW 1 and Relay on (Connect the Relay) and SW 2 off (or Disconnect SW 2)

(d) Disconnect and reconnect the connectors while watching the test light.
The short lies between the connector where the test light stays lit and the connector where the light goes out.

(e) Find the exact location of the short by lightly shaking the problem wire along the body.

CAUTION:

(a) Do not open the cover or the case of the ECU unless absolutely necessary. (If the IC terminals are touched, the IC may be destroyed by static electricity.)

(b) When replacing the internal mechanism (ECU part) of the digital meter, be careful that no part of your body or clothing comes in contact with the terminals of leads from the IC, etc. of the replacement part (spare part).

DISCONNECTION OF MALE AND FEMALE CONNECTORS

To pull apart the connectors, pull on the connector itself, not the wire harness.

HINT : Check to see what kind of connector you are disconnecting before pulling apart.

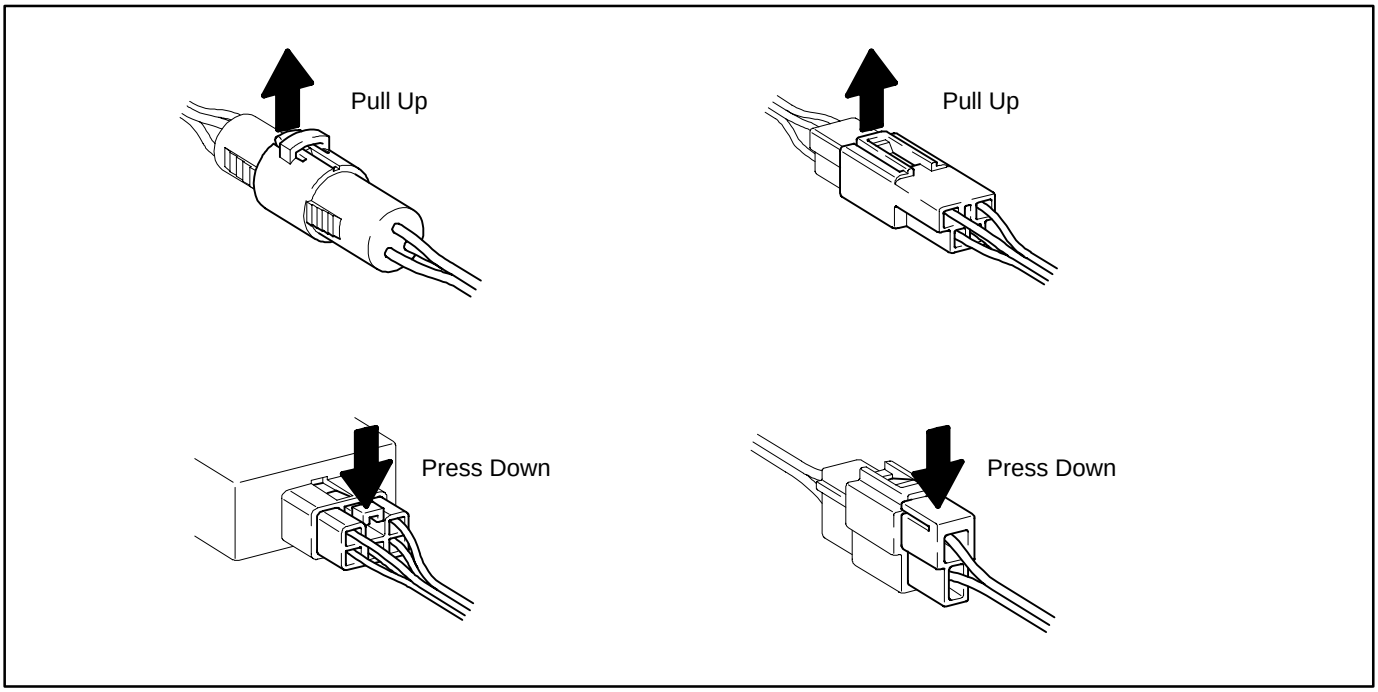

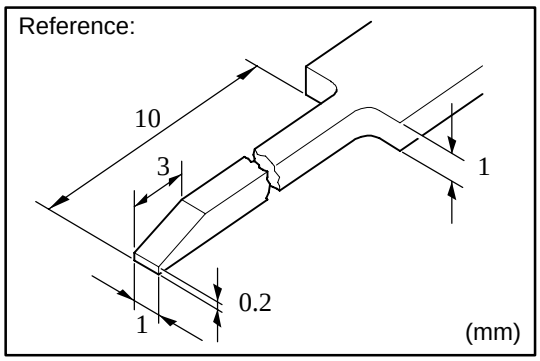

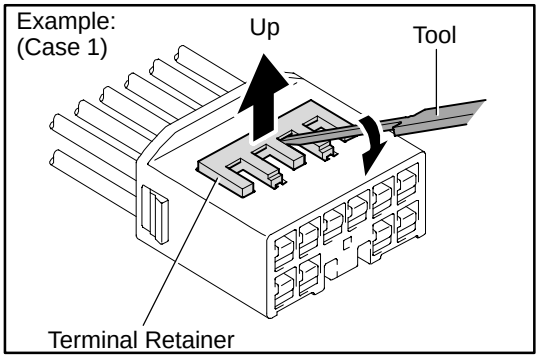

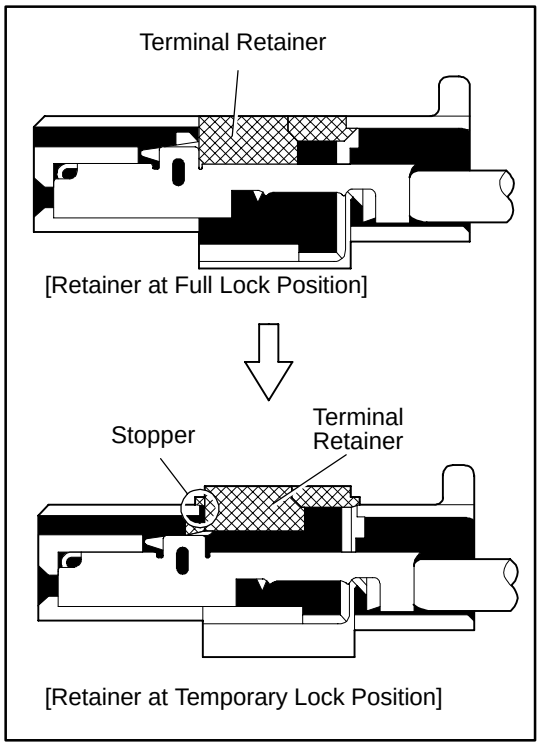

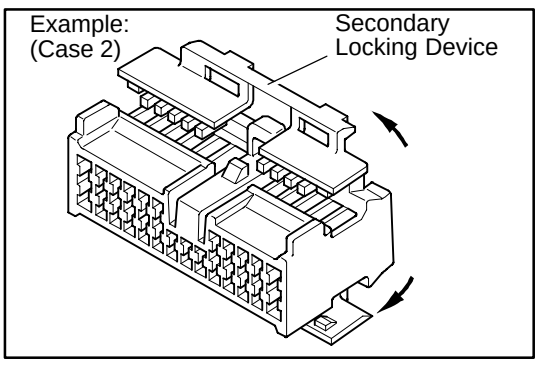

HOW TO REPLACE TERMINAL (with terminal retainer or secondary locking device)

1. PREPARE THE SPECIAL TOOL

   HINT : To remove the terminal from the connector, please construct and use the special tool or like object shown on the left.

2. DISCONNECT CONNECTOR

3. DISENGAGE THE SECONDARY LOCKING DEVICE OR TERMINAL RETAINER.

   (a) Locking device must be disengaged before the terminal locking clip can be released and the terminal removed from the connector.

   (b) Use a special tool or the terminal pick to unlock the secondary locking device or terminal retainer.

   NOTICE:
   Do not remove the terminal retainer from connector body.

   [A] For Non–Waterproof Type Connector

   HINT : The needle insertion position varies according to the connector's shape (number of terminals etc.), so check the position before inserting it.

   "Case 1"

   Raise the terminal retainer up to the temporary lock position.

   "Case 2"

   Open the secondary locking device.

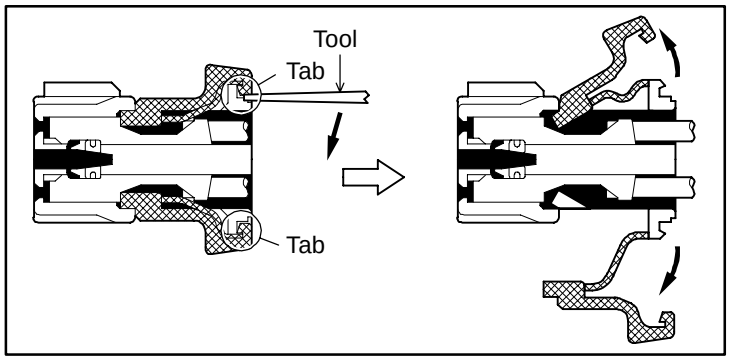

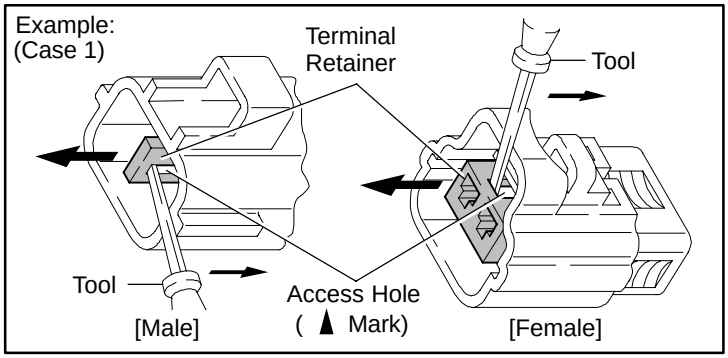

[B] For Waterproof Type Connector

HINT : Terminal retainer color is different according to connector body.

Example:

Terminal Retainer	: Connector Body
Black or White	: Gray
Black or White	: Dark Gray
Gray or White	: Black

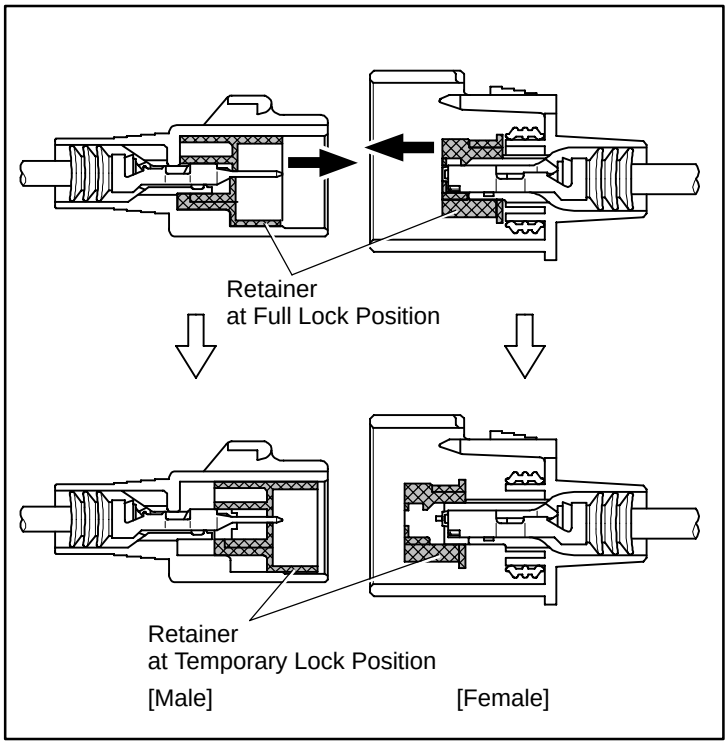

”Case 1”

Type where terminal retainer is pulled up to the temporary lock position (Pull Type).

Insert the special tool into the terminal retainer access hole (▲Mark) and pull the terminal retainer up to the temporary lock position.

HINT : The needle insertion position varies according to the connector’s shape (Number of terminals etc.), so check the position before inserting it.

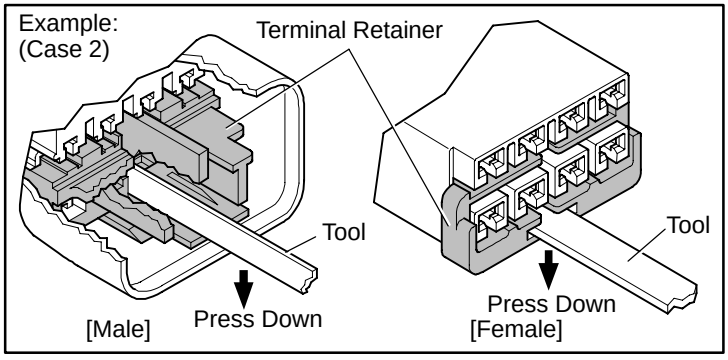

”Case 2”

Type which cannot be pulled as far as Power Lock insert the tool straight into the access hole of terminal retainer as shown.

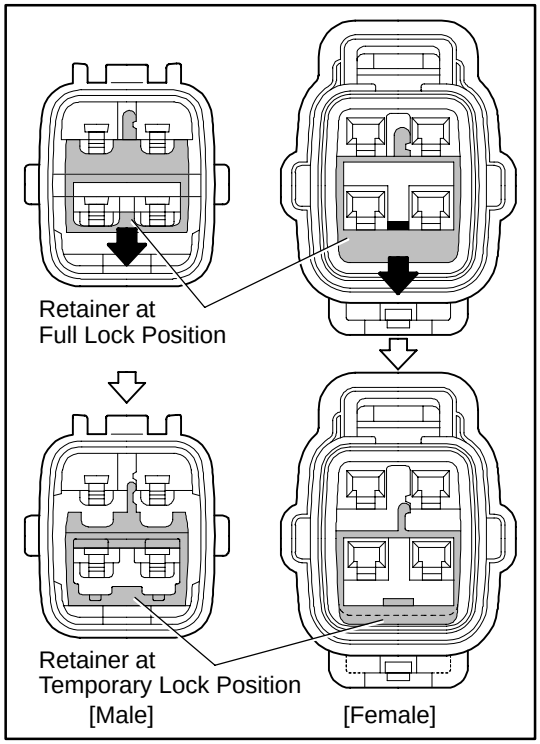

Push the terminal retainer down to the temporary lock position.

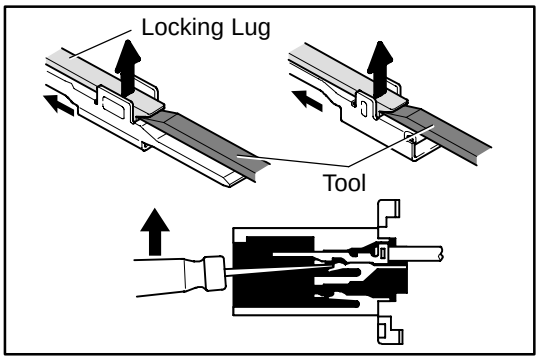

(c) Release the locking lug from terminal and pull the terminal out from rear.

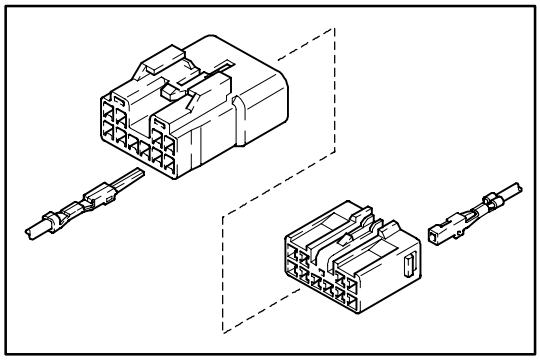

4. INSTALL TERMINAL TO CONNECTOR

(a) Insert the terminal.

HINT:
1. Make sure the terminal is positioned correctly.
2. Insert the terminal until the locking lug locks firmly.
3. Insert the terminal with terminal retainer in the temporary lock position.

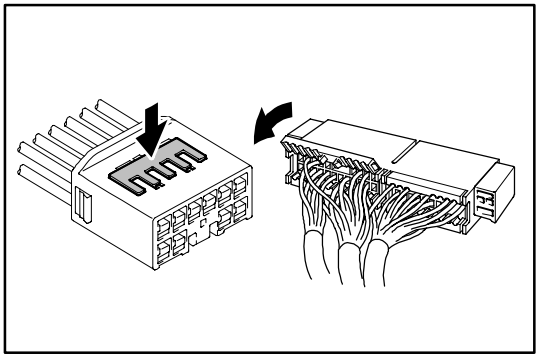

(b) Push the secondary locking device or terminal retainer in to the full lock position.

5. CONNECT CONNECTOR

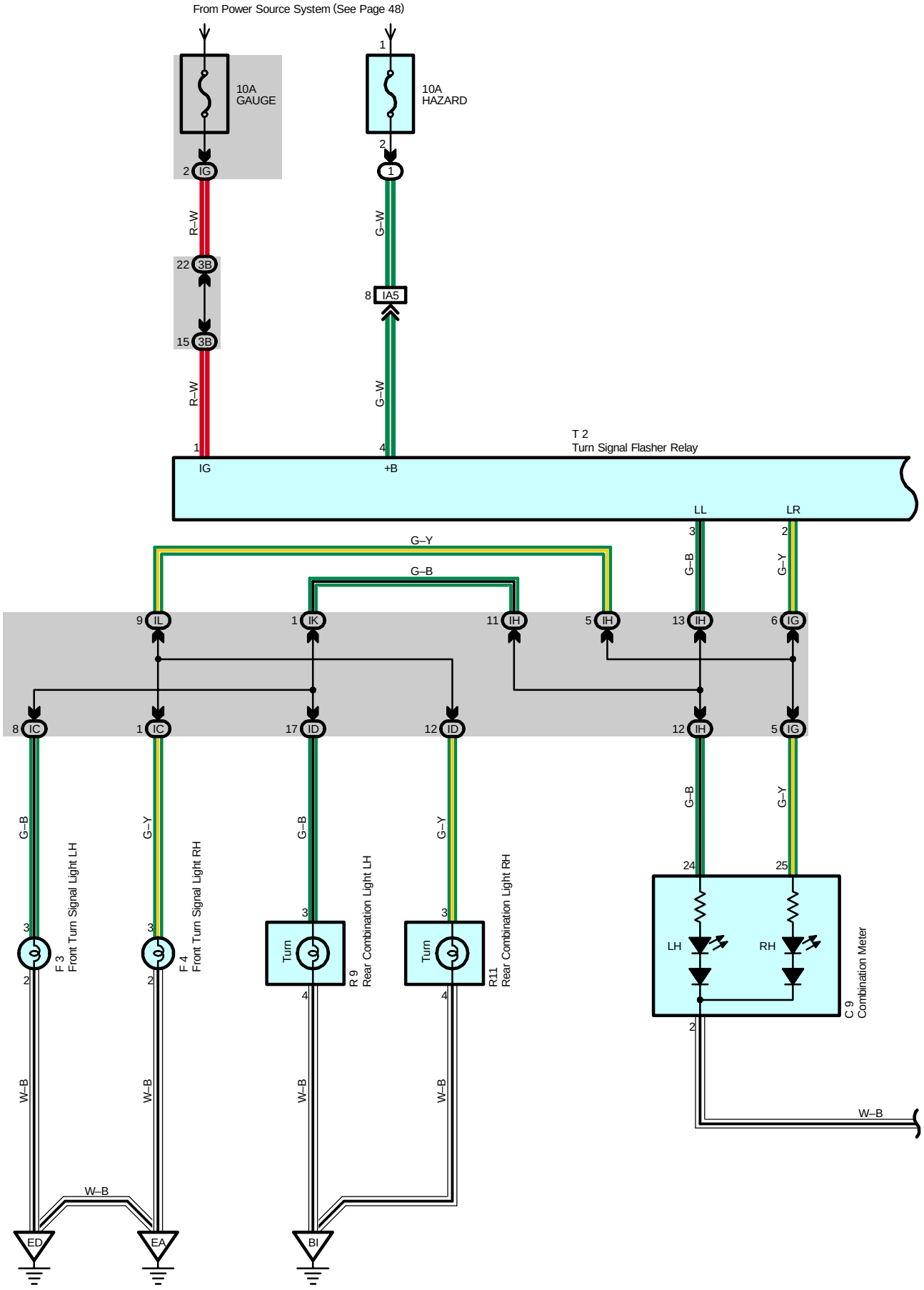
From Power Source System (See Page 48)
10A GAUGE
10A HAZARD
2 IG
1
2 1
R–W
G–W
22 3B
15 3B
8 IA5
R–W
G–W
1 IG
4 +B
T 2
Turn Signal Flasher Relay
LL
LR
3
2
G–Y
G–B
G–B
G–Y
9 IL
1 IK
11 IH
5 IH
13 IH
6 IG
8 IC
1 IC
17 ID
12 ID
12 IH
5 IG
G–B
G–Y
G–B
G–Y
G–B
G–Y
3
2
F 3
Front Turn Signal Light LH
3
2
F 4
Front Turn Signal Light RH
3
Turn
4
R 9
Rear Combination Light LH
3
Turn
4
R11
Rear Combination Light RH
24
25
LH
RH
C 9
Combination Meter
2
W–B
W–B
W–B
W–B
W–B
W–B
ED
EA
BI

* 1 : w/ Wireless Door Lock
* 2 : w/o Wireless Door Lock

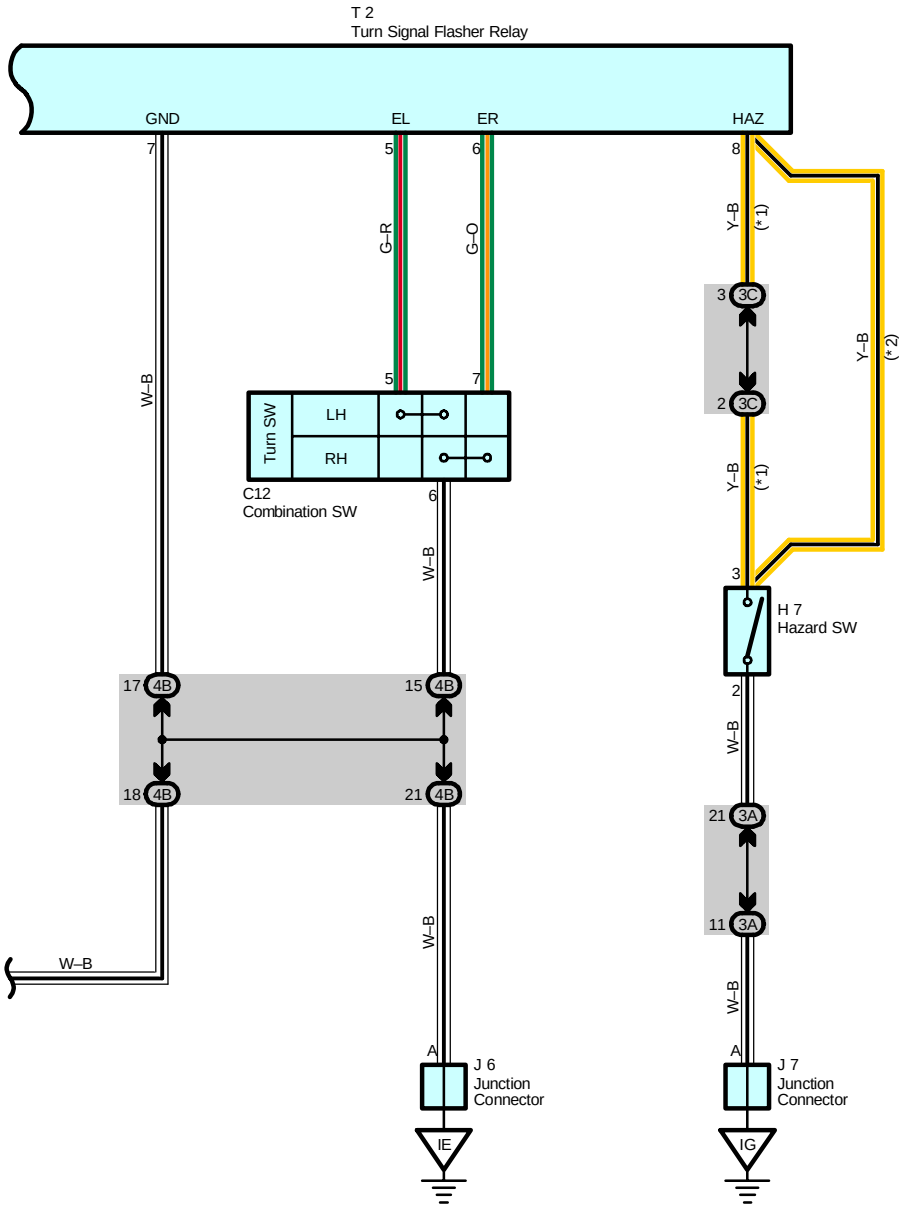

Turn Signal and Hazard Warning Light

Service Hints

T2 Turn Signal Flasher Relay

1–Ground : Approx. 12 volts with the ignition SW at ON position
7–Ground : Always continuity
4–Ground : Always approx. 12 volts

: Parts Location

Code	See Page	Code	See Page	Code	See Page
C9	34	H7	35	R11	37
C12	34	J6	35	T2	35
F3	32	J7	35		
F4	32	R9	37		

: Relay Blocks

Code	See Page	Relay Blocks (Relay Block Location)
1	22	Engine Room R/B (Engine Compartment Left)

: Junction Block and Wire Harness Connector

Code	See Page	Junction Block and Wire Harness (Connector Location)
IC	25	Engine Room Main Wire and Instrument Panel J/B (Lower Finish Panel)
ID	25	Floor Wire and Instrument Panel J/B (Lower Finish Panel)
IG	25	Instrument Panel Wire and Instrument Panel J/B (Lower Finish Panel)
IH		
IK	24	
IL		
3A	28	Instrument Panel Wire and RH J/B (Right Side of the Instrument Panel Reinforcement)
3B		
3C		
4B	30	Instrument Panel Wire and Center J/B (Behind the Combination Meter)

: Connector Joining Wire Harness and Wire Harness

Code	See Page	Joining Wire Harness and Wire Harness (Connector Location)
IA5	40	Engine Room Main Wire and Instrument Panel Wire (Left Side of the Instrument Panel Reinforcement)

: Ground Points

Code	See Page	Ground Points Location
EA	38	Front Right Fender
ED	38	Front Left Suspension Tower
IE	40	Behind the Combination Meter
IG	40	Right Kick Panel
BI	44	Lower Back Panel

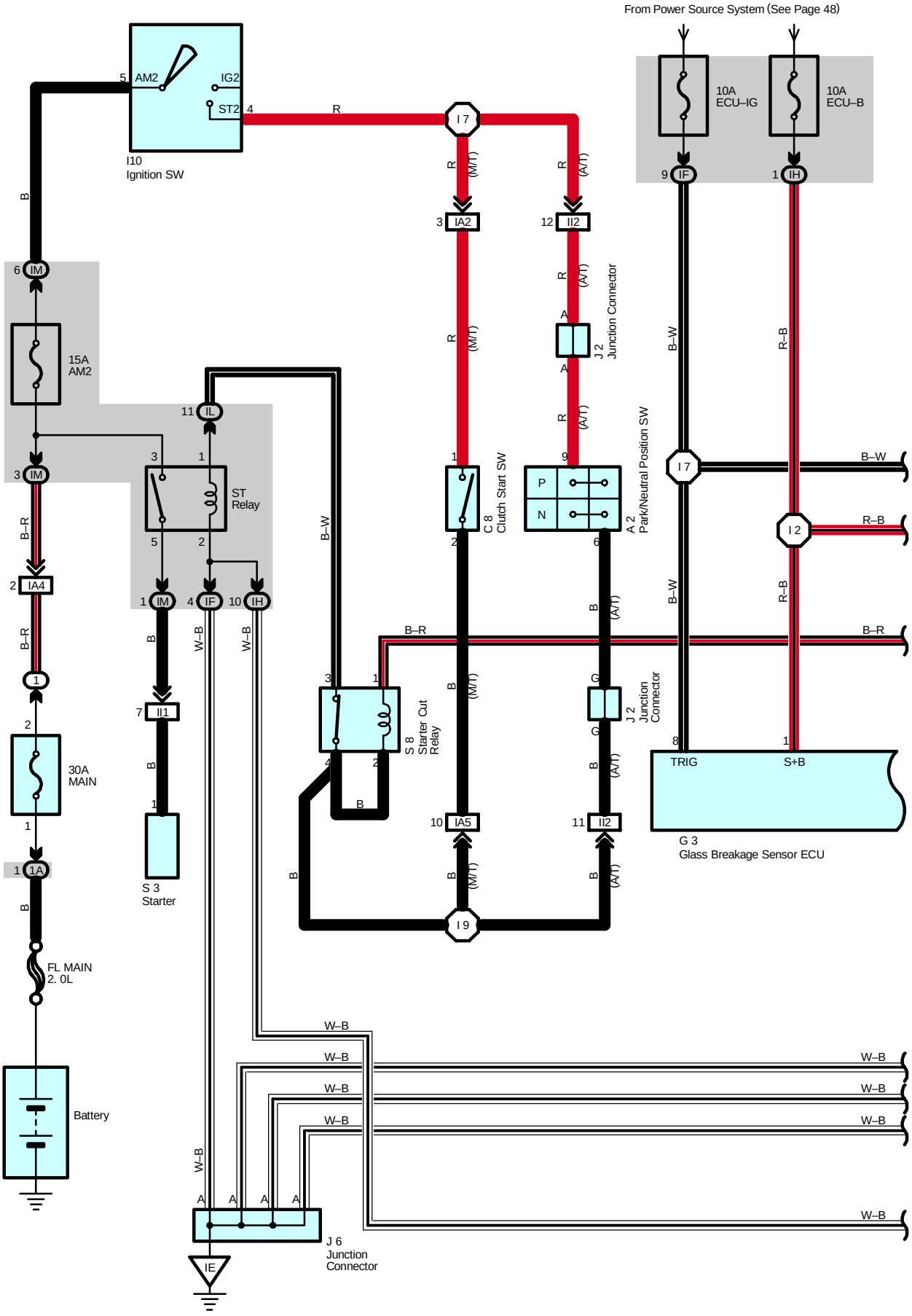
From Power Source System (See Page 48)
10A
ECU–IG
10A
ECU–B
I10
Ignition SW
AM2
IG2
ST2
15A
AM2
ST
Relay
30A
MAIN
FL MAIN
2. 0L
Battery
S 3
Starter
C 8
Clutch Start SW
A 2
Park/Neutral Position SW
J 2
Junction Connector
S 8
Starter Cut
Relay
G 3
Glass Breakage Sensor ECU
TRIG
S+B
J 6
Junction
Connector
IE
IM
IA4
IA2
IA5
II1
II2
IL
IF
IH
I 7
I 9
I 2
P
N
R
B
B–R
B–W
R–B
W–B
(M/T)
(A/T)

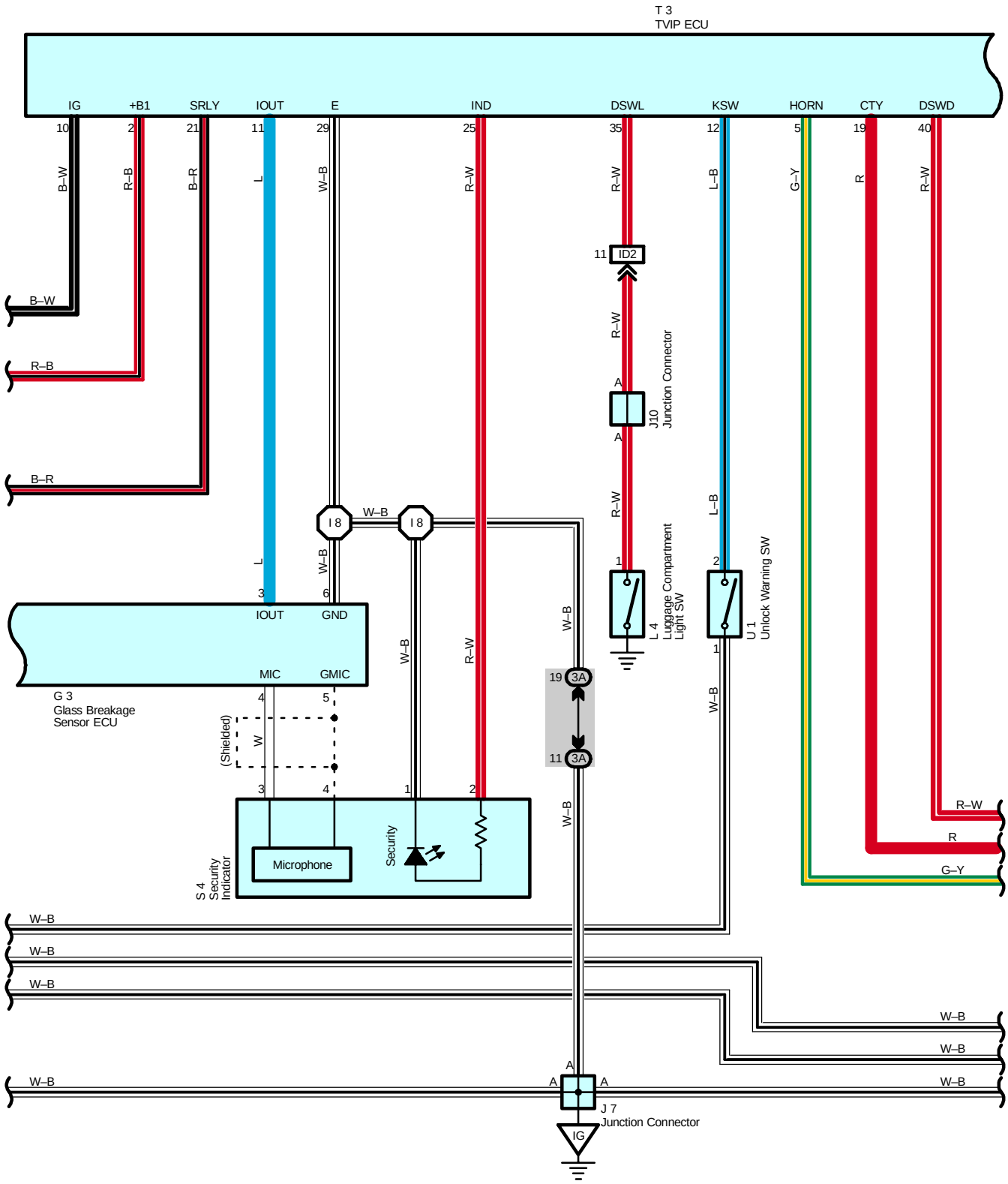
T 3
TVIP ECU
IG
+B1
SRLY
IOUT
E
IND
DSWL
KSW
HORN
CTY
DSWD
10
2
21
11
29
25
35
12
5
19
40
B–W
R–B
B–R
L
W–B
R–W
L–B
G–Y
R
11 ID2
A
A
J10
Junction Connector
I 8
I 8
3
6
IOUT
GND
MIC
GMIC
G 3
Glass Breakage
Sensor ECU
4
5
(Shielded)
W
3
4
1
2
Microphone
Security
S 4
Security
Indicator
L 4
Luggage Compartment
Light SW
1
2
U 1
Unlock Warning SW
19 3A
11 3A
A
A
A
J 7
Junction Connector
IG

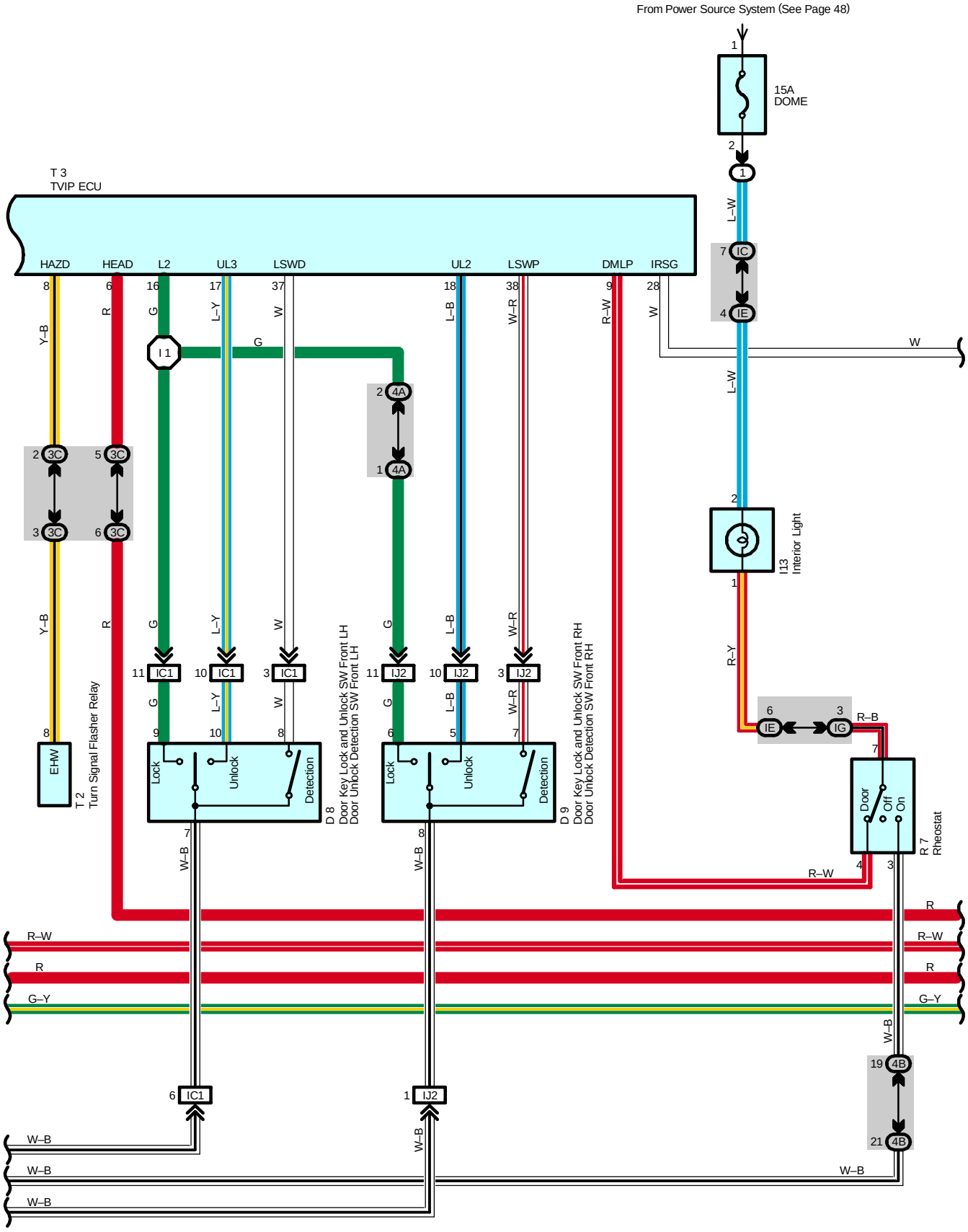
From Power Source System (See Page 48)
15A
DOME
T 3
TVIP ECU
HAZD
HEAD
L2
UL3
LSWD
UL2
LSWP
DMLP
IRSG
I 1
IC
IE
4A
3C
I13
Interior Light
IC1
IJ2
EHW
T 2
Turn Signal Flasher Relay
Lock
Unlock
Detection
D 8
Door Key Lock and Unlock SW Front LH
Door Unlock Detection SW Front LH
D 9
Door Key Lock and Unlock SW Front RH
Door Unlock Detection SW Front RH
IG
Door
Off
On
R 7
Rheostat
4B
Y–B
R
G
L–Y
W
L–B
W–R
R–W
W
L–W
R–Y
R–B
W–B
G–Y

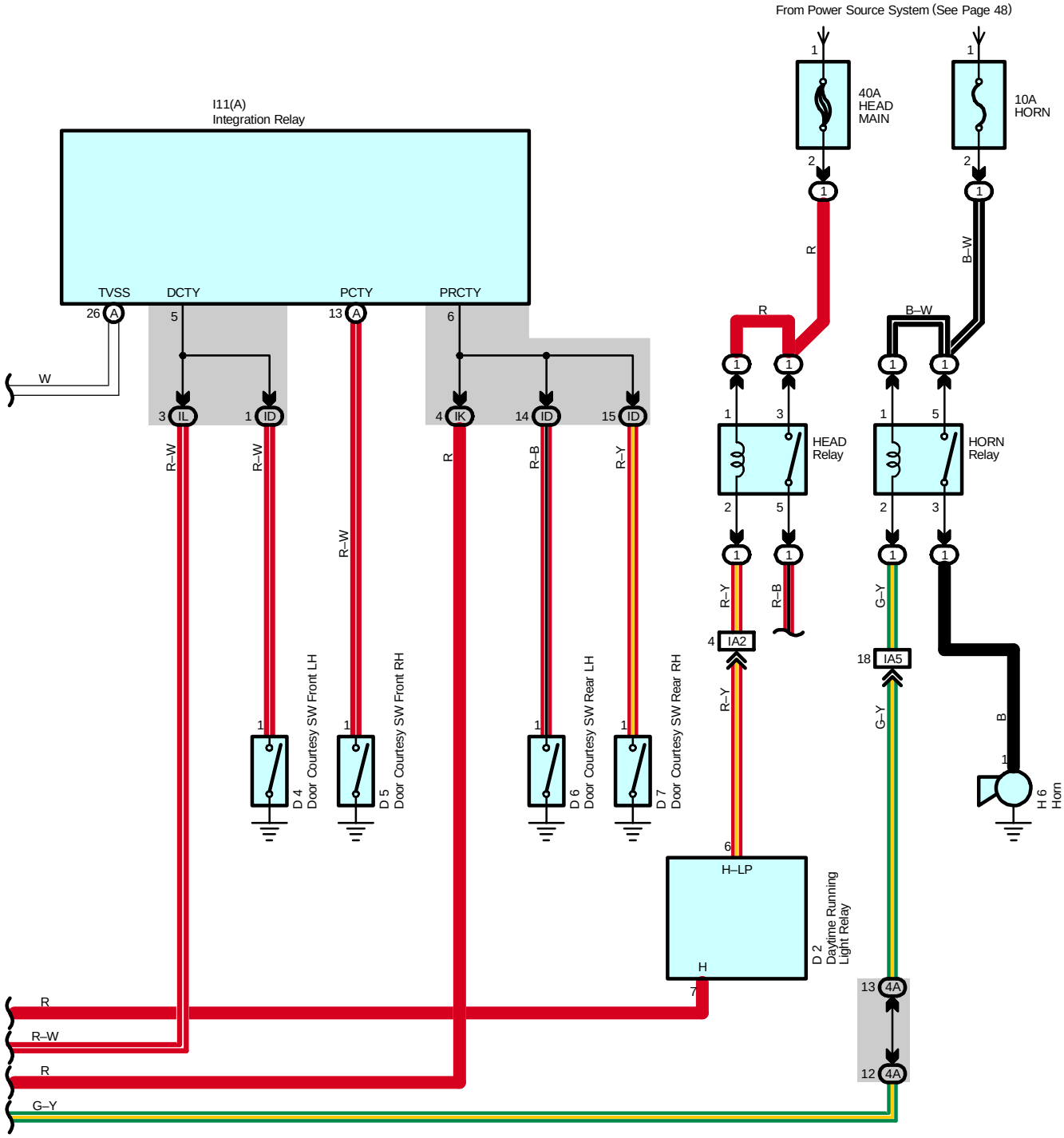
From Power Source System (See Page 48)
I11(A)
Integration Relay
TVSS
DCTY
PCTY
PRCTY
26 A
5
13 A
6
W
3 IL
1 ID
4 IK
14 ID
15 ID
R–W
R–W
R–W
R
R–B
R–Y
1
D 4
Door Courtesy SW Front LH
D 5
Door Courtesy SW Front RH
D 6
Door Courtesy SW Rear LH
D 7
Door Courtesy SW Rear RH
40A
HEAD
MAIN
10A
HORN
R
B–W
HEAD
Relay
HORN
Relay
R–Y
R–B
G–Y
4 IA2
18 IA5
G–Y
B
H 6
Horn
6
H–LP
H
7
D 2
Daytime Running
Light Relay
13 4A
12 4A
R
R–W
R
G–Y

TVIP System

Service Hints

T3 TVIP ECU

10–Ground : Approx. 12 volts with the ignition SW at ON position
2–Ground : Always approx. 12 volts
29–Ground : Always continuity

: Parts Location

Code	See Page	Code	See Page	Code	See Page
A2	32	G3	35	L4	36
C8	34	H6	32	R7	35
D2	34	I10	35	S3	33
D4	36	I11 A	35	S4	35
D5	36	I13	36	S8	35
D6	36	J2	35	T2	35
D7	36	J6	35	T3	35
D8	36	J7	35	U1	35
D9	36	J10	36		

: Relay Blocks

Code	See Page	Relay Blocks (Relay Block Location)
1	22	Engine Room R/B (Engine Compartment Left)

: Junction Block and Wire Harness Connector

Code	See Page	Junction Block and Wire Harness (Connector Location)
IC	25	Engine Room Main Wire and Instrument Panel J/B (Lower Finish Panel)
ID	25	Floor Wire and Instrument Panel J/B (Lower Finish Panel)
IE	25	Roof Wire and Instrument Panel J/B (Lower Finish Panel)
IF	25	Instrument Panel Wire and Instrument Panel J/B (Lower Finish Panel)
IG		
IH		
IK	24	
IL		
IM		
1A	22	Engine Wire and Engine Room J/B (Engine Compartment Left)
3A	28	Instrument Panel Wire and RH J/B (Right Side of the Instrument Panel Reinforcement)
3C		
4A	30	Instrument Panel Wire and Center J/B (Behind the Combination Meter)
4B		

: Connector Joining Wire Harness and Wire Harness

Code	See Page	Joining Wire Harness and Wire Harness (Connector Location)
IA2	40	Engine Room Main Wire and Instrument Panel Wire (Left Side of the Instrument Panel Reinforcement)
IA4		
IA5		
IC1	40	Front Door LH Wire and Instrument Panel Wire (Left Kick Panel)
ID2	42	Instrument Panel Wire and Floor Wire (Left Kick Panel)
II1	42	Engine Wire and Instrument Panel Wire (Blower Unit RH)
II2		
IJ2	42	Front Door RH Wire and Instrument Panel Wire (Right Kick Panel)

: Ground Points

Code	See Page	Ground Points Location
IE	40	Behind the Combination Meter
IG	40	Right Kick Panel

: **Splice Points**

Code	See Page	Wire Harness with Splice Points	Code	See Page	Wire Harness with Splice Points
I1	42	Instrument Panel Wire	I8	42	Instrument Panel Wire
I2			I9		
I7					

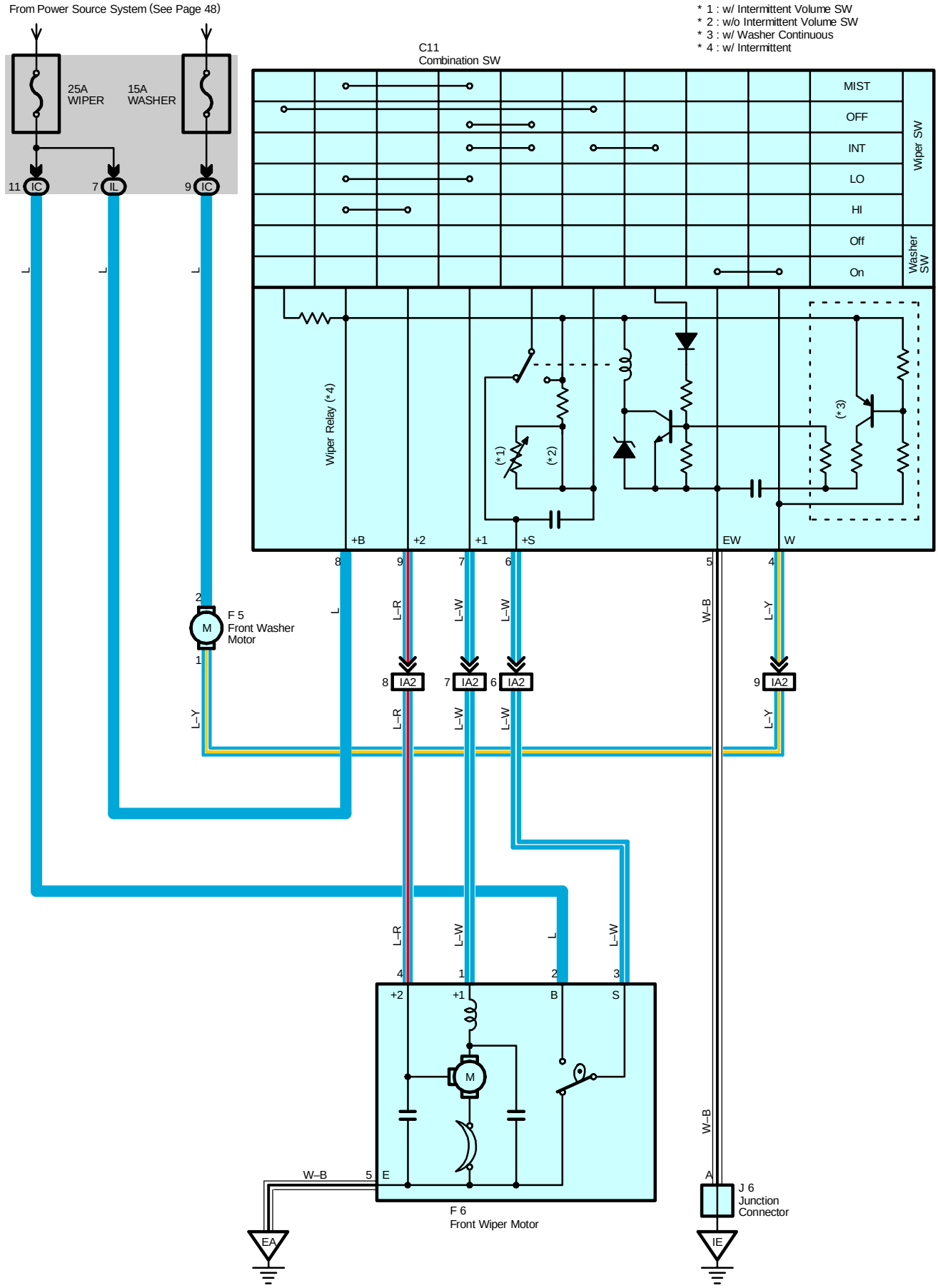
From Power Source System (See Page 48)
* 1 : w/ Intermittent Volume SW
* 2 : w/o Intermittent Volume SW
* 3 : w/ Washer Continuous
* 4 : w/ Intermittent
C11
Combination SW
25A
WIPER
15A
WASHER
11 IC
7 IL
9 IC
MIST
OFF
INT
LO
HI
Off
On
Wiper SW
Washer SW
Wiper Relay (*4)
(*1)
(*2)
(*3)
+B
+2
+1
+S
EW
W
F 5
Front Washer
Motor
8 IA2
7 IA2
6 IA2
9 IA2
L–R
L–W
L–Y
W–B
L
F 6
Front Wiper Motor
+2
+1
B
S
M
E
W–B
EA
A
J 6
Junction
Connector
IE

System Outline

With the ignition SW turned on, the current flows to TERMINAL 8 of the wiper and washer SW, TERMINAL 2 of the front wiper motor through the WIPER fuse, and the current flows to TERMINAL 2 of the washer motor through the WASHER fuse.

1. Low Speed Position

With wiper SW turned to LO position, the current flows from TERMINAL 8 of the front wiper and washer SW to TERMINAL 7 to TERMINAL 1 of the front wiper motor to TERMINAL 5 to GROUND and causes to the front wiper motor to run at low speed.

2. High Speed Position

With wiper SW turned to HI position, the current flows from TERMINAL 8 of the front wiper and washer SW to TERMINAL 9 to TERMINAL 4 of the front wiper motor to TERMINAL 5 to GROUND and causes to the wiper motor to run at high speed.

3. INT Position

With wiper SW turned to INT position, the relay operates and the current which is connected by relay function flows from TERMINAL 8 of the front wiper and washer SW to TERMINAL 5 to GROUND. This flow of current operates the intermittent circuit and the current flows from TERMINAL 8 of the front wiper and washer SW to TERMINAL 7 to TERMINAL 1 of the front wiper motor to TERMINAL 5 to GROUND and the functions.
The intermittent operation is controlled by the charge/discharge function of the condenser installed in the relay, and the intermittent time is controlled by a time control SW (w/ intermittent volume SW) to change the charging time of the condenser.

4. MIST Position

With wiper SW turned to MIST position, the current flows from TERMINAL 8 of the front wiper and washer SW to TERMINAL 7 to TERMINAL 1 of the front wiper motor to TERMINAL 5 to GROUND and causes to the front wiper motor to run at low speed.

5. Washer Continuous Operation

With the washer SW turned to on, the current flows from TERMINAL 2 of the washer motor to TERMINAL 1 to TERMINAL 4 of the front wiper and washer SW to TERMINAL 5 to GROUND and causes to the washer motor to run, and the window washer jet operates. This causes the current to flow to washer continuous operation circuit in TERMINAL 8 of the front wiper and washer SW to TERMINAL 7 to TERMINAL 1 of the front wiper motor to TERMINAL 5 to GROUND and the washer operates continuously.

Service Hints

C11 Combination SW

5–Ground : Always continuity
8–Ground : Approx. 12 volts with ignition SW at On position
7–Ground : Approx. 12 volts with wiper and washer SW at LO position
: Approx. 12 volts with wiper and washer SW at MIST position
: Approx. 12 volts every approx. 1 to 10 seconds intermittently with wiper and washer SW at INT position
6–Ground : Approx. 12 volts with ignition SW on unless wiper motor at STOP position
9–Ground : Approx. 12 volts with ignition SW on and wiper and washer SW at HI position

F6 Front Wiper Motor

2–3 : Closed unless wiper motor at STOP position

○ : Parts Location

Code	See Page	Code	See Page	Code	See Page
C11	34	F6	32		
F5	32	J6	35		

⬭ : Junction Block and Wire Harness Connector

Code	See Page	Junction Block and Wire Harness (Connector Location)
IC	25	Engine Room Main Wire and Instrument Panel J/B (Lower Finish Panel)
IL	24	Instrument Panel Wire and Instrument Panel J/B (Lower Finish Panel)

▭ : Connector Joining Wire Harness and Wire Harness

Code	See Page	Joining Wire Harness and Wire Harness (Connector Location)
IA2	40	Engine Room Main Wire and Instrument Panel Wire (Left Side of the Instrument Panel Reinforcement)

▽ : **Ground Points**

Code	See Page	Ground Points Location
EA	38	Front Right Fender
IE	40	Behind the Combination Meter

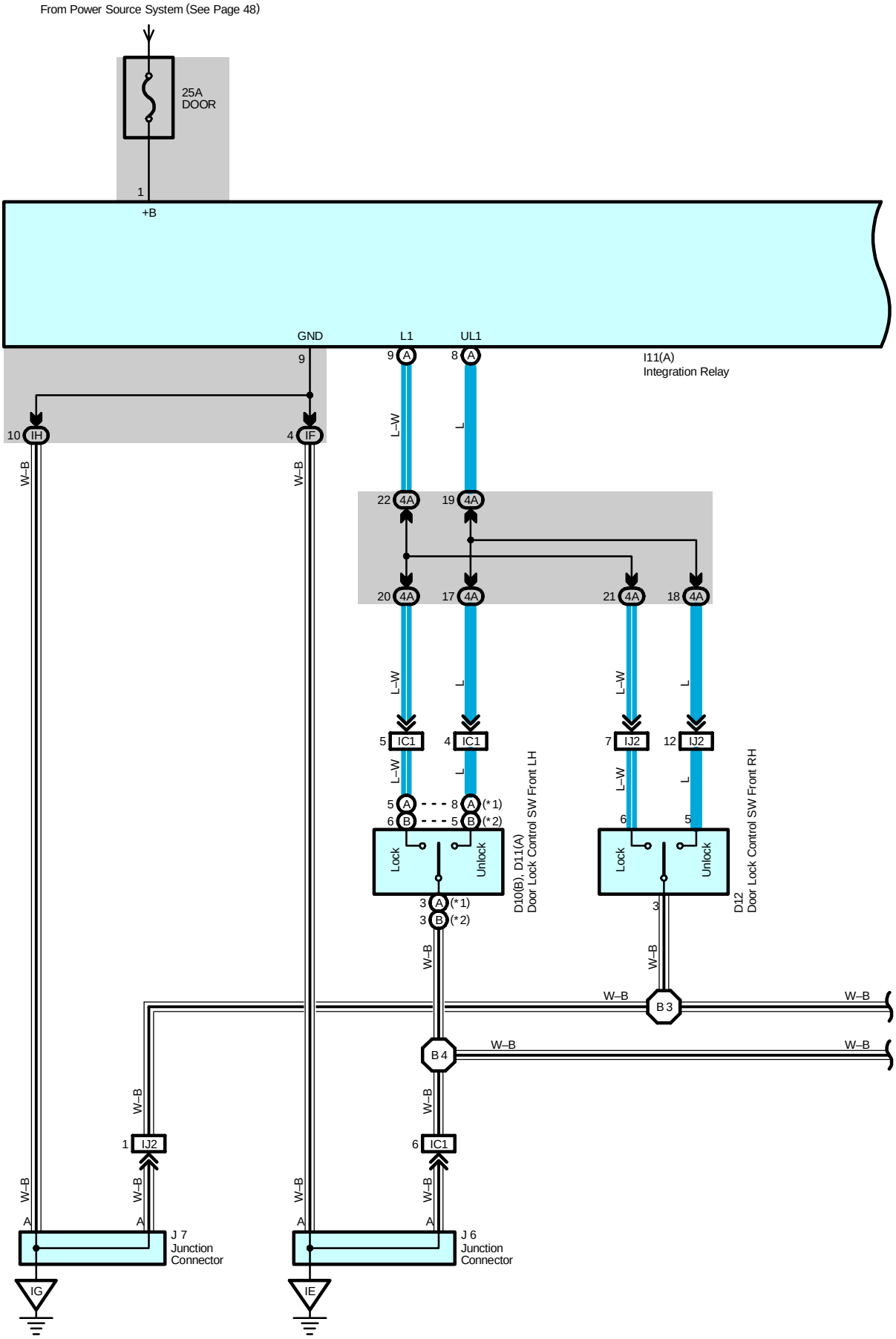
From Power Source System (See Page 48)
25A
DOOR
1
+B
GND
L1
UL1
9
9 A
8 A
I11(A)
Integration Relay
10 IH
4 IF
L–W
L
W–B
22 4A
19 4A
20 4A
17 4A
21 4A
18 4A
5 IC1
4 IC1
7 IJ2
12 IJ2
5 A
6 B
8 A (*1)
5 B (*2)
Lock
Unlock
3 A (*1)
3 B (*2)
D10(B), D11(A)
Door Lock Control SW Front LH
D12
Door Lock Control SW Front RH
B 3
B 4
1 IJ2
6 IC1
A
J 7
Junction
Connector
J 6
Junction
Connector
IG
IE

* 1 : w/ Power Window
* 2 : w/o Power Window

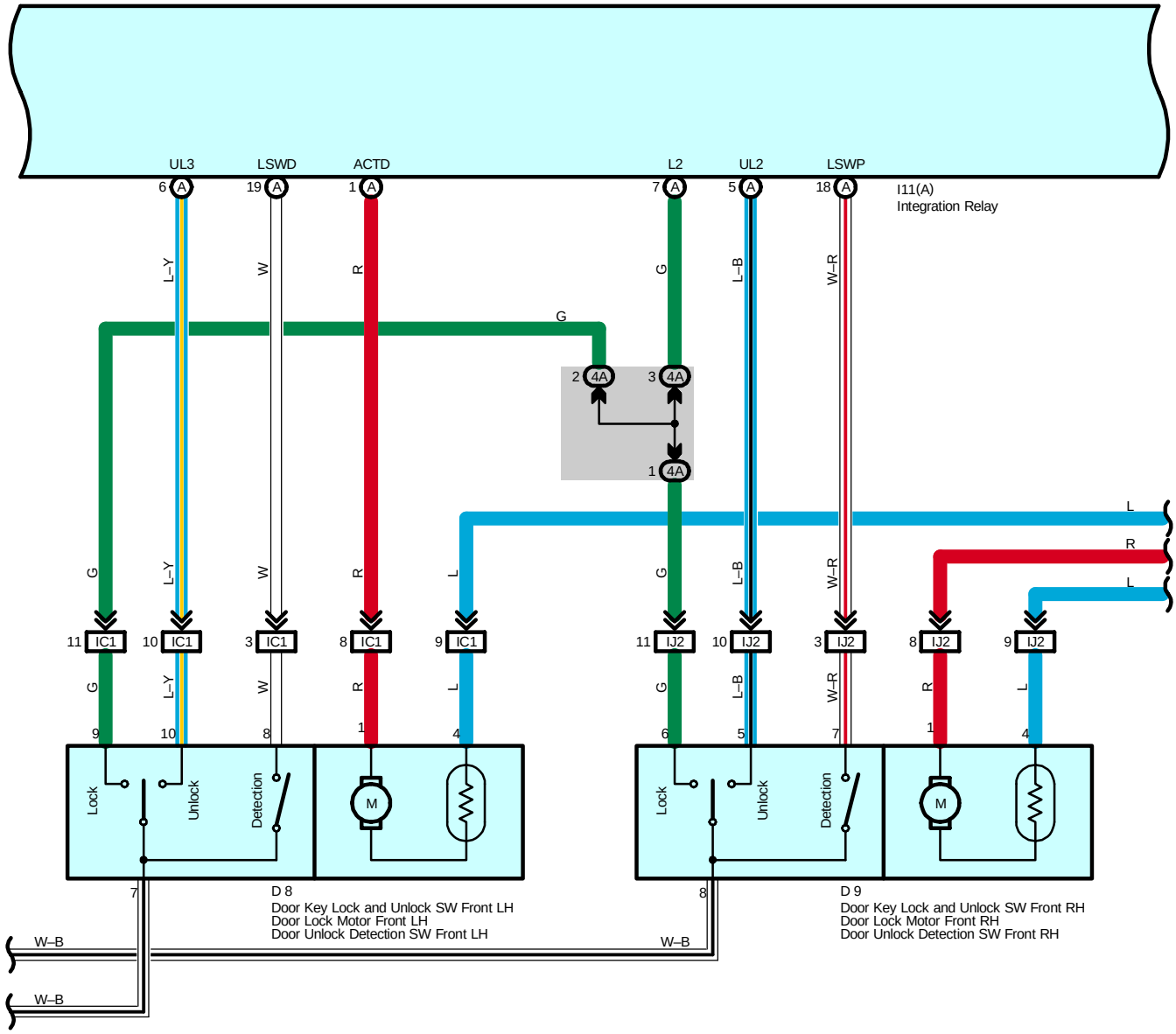

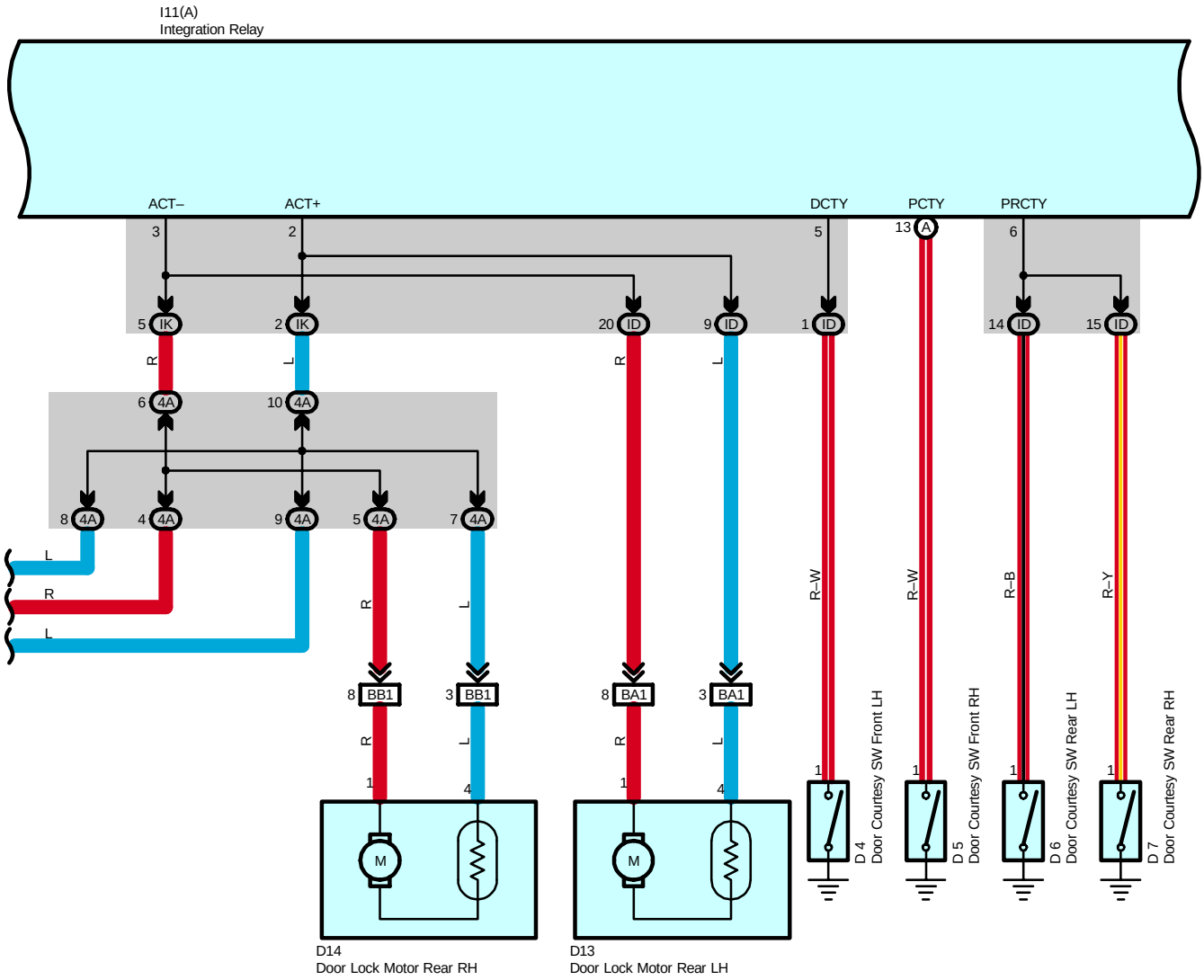
I11(A)
Integration Relay
ACT–
ACT+
DCTY
PCTY
PRCTY
3
2
5
13
A
6
5 IK
2 IK
20 ID
9 ID
1 ID
14 ID
15 ID
R
L
6 4A
10 4A
8 4A
4 4A
9 4A
5 4A
7 4A
L
R
L
R
L
8 BB1
3 BB1
8 BA1
3 BA1
R
L
R
L
1
4
1
4
M
M
R–W
R–W
R–B
R–Y
1
1
1
1
D 4
Door Courtesy SW Front LH
D 5
Door Courtesy SW Front RH
D 6
Door Courtesy SW Rear LH
D 7
Door Courtesy SW Rear RH
D14
Door Lock Motor Rear RH
D13
Door Lock Motor Rear LH

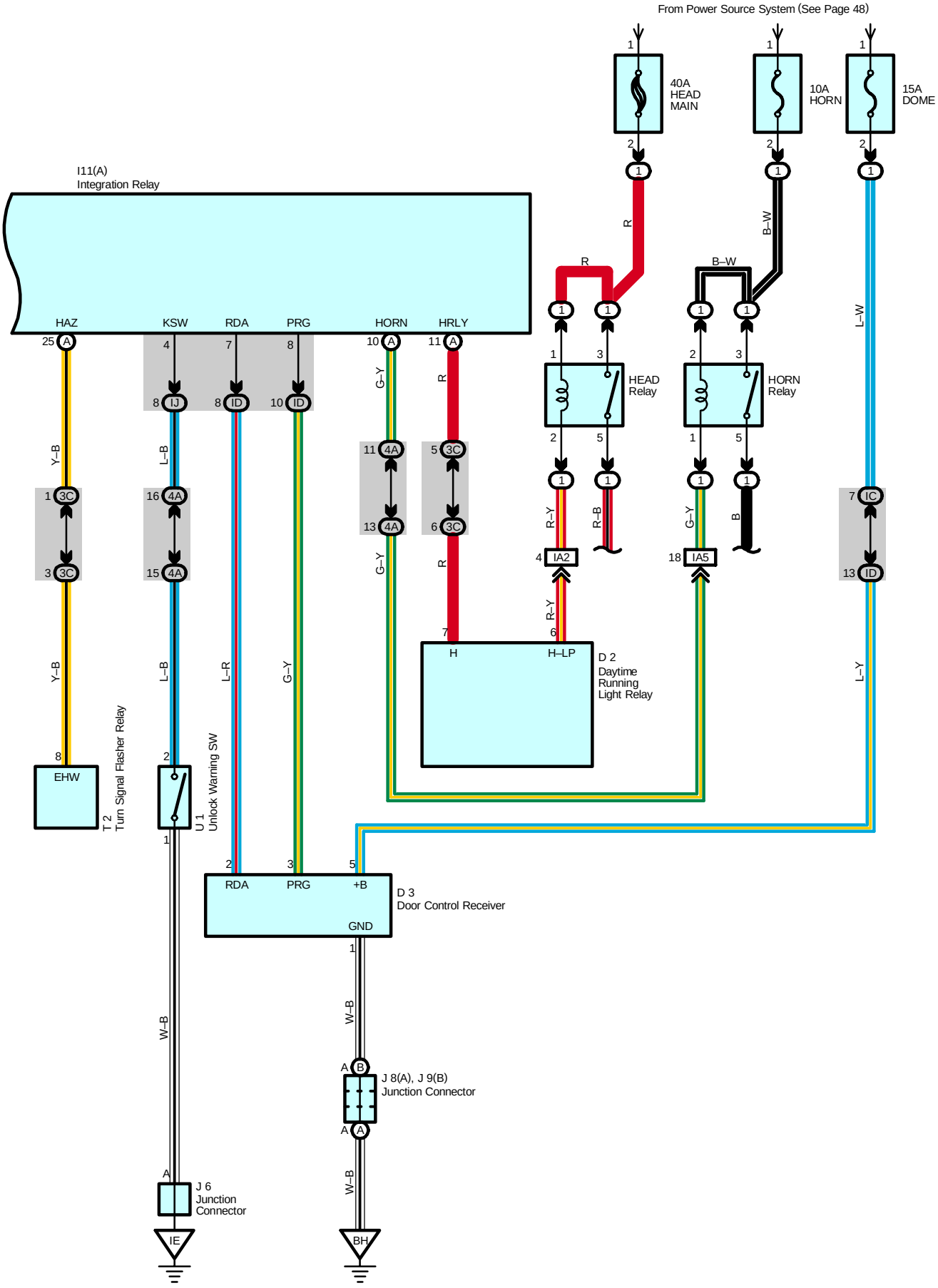
From Power Source System (See Page 48)
40A
HEAD
MAIN
10A
HORN
15A
DOME
I11(A)
Integration Relay
HAZ
KSW
RDA
PRG
HORN
HRLY
HEAD
Relay
HORN
Relay
EHW
T 2
Turn Signal Flasher Relay
U 1
Unlock Warning SW
D 2
Daytime
Running
Light Relay
D 3
Door Control Receiver
RDA
PRG
+B
GND
J 8(A), J 9(B)
Junction Connector
J 6
Junction
Connector
IE
BH

Wireless Door Lock Control

System Outline

Door lock control (Lock and unlock) and panic control (TVIP alarm and flash) is performed by remote control, without the ignition key inserted in the door key cylinder, using low–power electrical waves emitted by a transmitter.

1. Wireless Door Lock or Unlock Normal Operation

With the ignition key not inserted into the ignition key cylinder (Unlock warning SW off) and all the doors completely closed, when the lock or unlock button (Transmitter) is pushed, the door control receiver receives the electrical waves from the transmitter, and sends a signal to the integration relay causing it to operate.
As a result, the integration relay judges whether the door is locked or unlocked based on the signal from the door lock motor and door unlock detection SW, and sends a signal to switch the condition from lock to unlock or vice versa, causing the door lock motor to operate.

2. Visual Confirmation of Lock or Unlock

If all doors indicate that they are locked after the lock command, parking lights and taillights will flash once. If any door indicates that it is open after the unlock command, parking lights and taillights will flash twice.

3. Wireless Door Unlock Operation

Pushing the unlock button (Transmitter) once, driver's door is unlocked. Furthermore, pushing the button again within 3 seconds, the other doors are unlocked.

4. Automatic Lock Operation

With the ignition key not inserted into the ignition key cylinder (Unlock warning SW off) and all the doors completely closed, after pushing the button (Transmitter) to unlock all the doors, if a door is not opened within 30 seconds, all the doors will be automatically relocked.

5. Wireless Control Stop Function

If a door is open (Door courtesy SW on), a signal is input from the door courtesy SW to the integration relay stopping wireless door lock or unlock.
If the ignition key is in the ignition key cylinder (Unlock warning SW on), the unlock warning SW inputs a signal to the integration relay stopping wireless door lock or unlock.

6. Repeat Function

In case an appropriate lock detection signal is not received after outputting a lock signal when pushing the lock button (Transmitter), 1 seconds later, the integration relay output the lock signal again.

7. Remote Panic Operation

Panic will function when doors are locked or unlocked, open or closed. When the panic button (Transmitter) is pushed once, theft alarm sounds and headlights and taillights flash. Then, the panic or the unlock button (Transmitter) is pushed once more, sounding and flashing will stop. Panic will not function when ignition key is in ignition key cylinder.

Service Hints

I11 (A) Integration Relay

9–Ground : Always continuity
5–Ground : Continuity with the driver's door open
1–Ground : Always approx. 12 volts
2–Ground : Approx. 12 volts 0.2 seconds with following operation
∗ Door lock control SW locked
∗ Locking the driver's, front passenger's door cylinder with the key
(A) 9–Ground : Continuity with the door lock control SW locked
(A)13–Ground : Continuity with the front passenger's door open
(A)19–Ground : Continuity with the driver's door lock knob unlocked
(A) 8–Ground : Continuity with the door lock control SW unlocked
(A) 5–Ground : Continuity with the front passenger's door lock cylinder unlock with the key
(A) 6–Ground : Continuity with the driver's door lock cylinder unlocked with the key
(A) 7–Ground : Continuity with the driver's, front passenger's door lock cylinder locked with the key
(A) 1 or 3–Ground : Approx. 12 volts 0.2 seconds with following operation
∗ Door lock control SW unlocked
∗ Door lock control SW locked with the ignition key in cylinder and the driver's door open (Ignition key reminder function)
∗ Door lock knob locked with the ignition key in cylinder and the driver's door open (Ignition key reminder function)
∗ Unlocking the driver's, front passenger's door cylinder with the key

D4, D5, D6, D7 Door Courtesy SW Front LH, RH, Rear LH, RH

1–Ground : Closed with the door open

U1 Unlock Warning SW

1–2 : Closed with the ignition key in cylinder

D3 Door Control Receiver

5–Ground : Always approx. 12 volts
1–Ground : Always continuity

○ : Parts Location

Code	See Page	Code	See Page	Code	See Page
D2	34	D9	36	J6	35
D3	36	D10 B	36	J7	35
D4	36	D11 A	36	J8 A	36
D5	36	D12	36	J9 B	36
D6	36	D13	36	T2	35
D7	36	D14	36	U1	35
D8	36	I11 A	35		

▭ : Relay Blocks

Code	See Page	Relay Blocks (Relay Block Location)
1	22	Engine Room R/B (Engine Compartment Left)

▭ : Junction Block and Wire Harness Connector

Code	See Page	Junction Block and Wire Harness (Connector Location)
IC	25	Engine Room Main Wire and Instrument Panel J/B (Lower Finish Panel)
ID	25	Floor Wire and Instrument Panel J/B (Lower Finish Panel)
IF	25	Instrument Panel Wire and Instrument Panel J/B (Lower Finish Panel)
IH		
IJ		
IK	24	
3C	28	Instrument Panel Wire and RH J/B (Right Side of the Instrument Panel Reinforcement)
4A	30	Instrument Panel Wire and Center J/B (Behind the Combination Meter)

Wireless Door Lock Control

: Connector Joining Wire Harness and Wire Harness

Code	See Page	Joining Wire Harness and Wire Harness (Connector Location)
IA2	40	Engine Room Main Wire and Instrument Panel Wire (Left Side of the Instrument Panel Reinforcement)
IA5		
IC1	40	Front Door LH Wire and Instrument Panel Wire (Left Kick Panel)
IJ2	42	Front Door RH Wire and Instrument Panel Wire (Right Kick Panel)
BA1	44	Rear Door LH Wire and Floor Wire (Left Center Pillar)
BB1	44	Rear Door RH Wire and Instrument Panel Wire (Right Center Pillar)

: Ground Points

Code	See Page	Ground Points Location
IE	40	Behind the Combination Meter
IG	40	Right Kick Panel
BH	44	Under the Left Quarter Pillar

: Splice Points

Code	See Page	Wire Harness with Splice Points	Code	See Page	Wire Harness with Splice Points
B3	44	Front Door RH Wire	B4	44	Front Door LH Wire